PROJECT DEVELOPMENT AND ENVIRONMENT (PD&E)
DESIGN TRAFFIC MEMORANDUM

SR 694 (GANDY BOULEVARD)
FROM US 19 TO EAST OF 4th STREET

Project Numbers: 256931 1 32 01

Project Description
PD&E STUDY FOR SR 694 (GANDY BOULEVARD)
FROM US 19 TO EAST OF 4th STREET

Prepared for:

FDOT District 7

Prepared by:

Gannett Fleming, Inc.
9119 Corporate Lake Drive, Suite 150
Tampa, Florida 33607

August 2002

TABLE OF CONTENTS

LIST OF TABLES

LIST OF FIGURES

SECTION 1
INTRODUCTION

The Florida Department of Transportation (FDOT) has conducted a Project Development and Environment (PD&E) Study to evaluate improvement alternatives along Gandy Boulevard (S.R. 694) from west of U.S. 19 to east of 4th Street in the cities of Pinellas Park and St. Petersburg in Pinellas County, Florida.

1.1 Purpose

The objective of the PD&E Study was to provide documented environmental and engineering analyses, which would help the FDOT and the Federal Highway Administration (FHWA) reach a decision on the type, conceptual design, and location of the necessary improvements along the Gandy Boulevard corridor to accommodate future transportation needs in a safe and efficient manner.

This report documented the need for the project and presented the procedures used to develop and evaluate various improvement alternatives as they relate to the transportation facility. Engineering data and information about the environmental characteristics of the area, which are essential to the alignment and analytical decision-making process, has been collected. Once sufficient data were available, alignment criteria was used to refine the alternatives. The comparison of alternatives was based on a variety of parameters using a matrix format outlined in the MIS' Screen Two Evaluation Report and other factors identified during this study effort. This MIS process identified the alternative that would have the least impact while providing the necessary improvements.

1.2 Project Description

Through the PD&E Study process, the FDOT evaluated improvement alternatives along the Gandy Boulevard corridor. The S.R. 694 corridor is primarily an east/west facility, which in its entirety, extends from a western terminus at Gulf Boulevard in Pinellas County to an eastern terminus at Bayshore Boulevard in Hillsborough County. The S.R. 694 (Gandy Boulevard) corridor is functionally classified as an east/west principal urban arterial highway and is part of

the Federal Aid Primary System, State Highway System (SHS) and Florida Intrastate Highway System (FIHS). The facility also serves as a major hurricane evacuation route for residents in Pinellas County. The PD&E study limits encompass the portion of S.R. 694 (Gandy Boulevard) from west of the U.S. 19/Gandy Boulevard interchange to east of 4th Street and include proposed interchanges at: 4th Street and Gandy Boulevard; 9th Street and Gandy Boulevard; and interchange improvements to Interstate 275. The project location and limits are depicted in **Figure 1.1**. The total length of the study corridor is approximately 3.9 miles (6.2 kilometers). This project has been evaluated in the Gandy Major Investment Study (MIS), which was initiated in 1996.

For PD&E studies, projects are divided into segments based on the existing land use, interchange locations, and projected traffic volumes for the design year. Because the portion of Gandy Boulevard from west of U.S. 19 to east of 4th Street contained similar land use characteristics and projected traffic volumes, this project was divided into four segments based on the new interchanges that are proposed in the corridor. The segments of the project are identified as follows:

- Segment A: West of U.S. 19 to west of Grand Avenue
- Segment B: West of Grand Avenue to west of Interstate 275
- Segment C: West of Interstate 275 to west of 9th Street North
- Segment D: West of 9th Street North to east of 4th Street

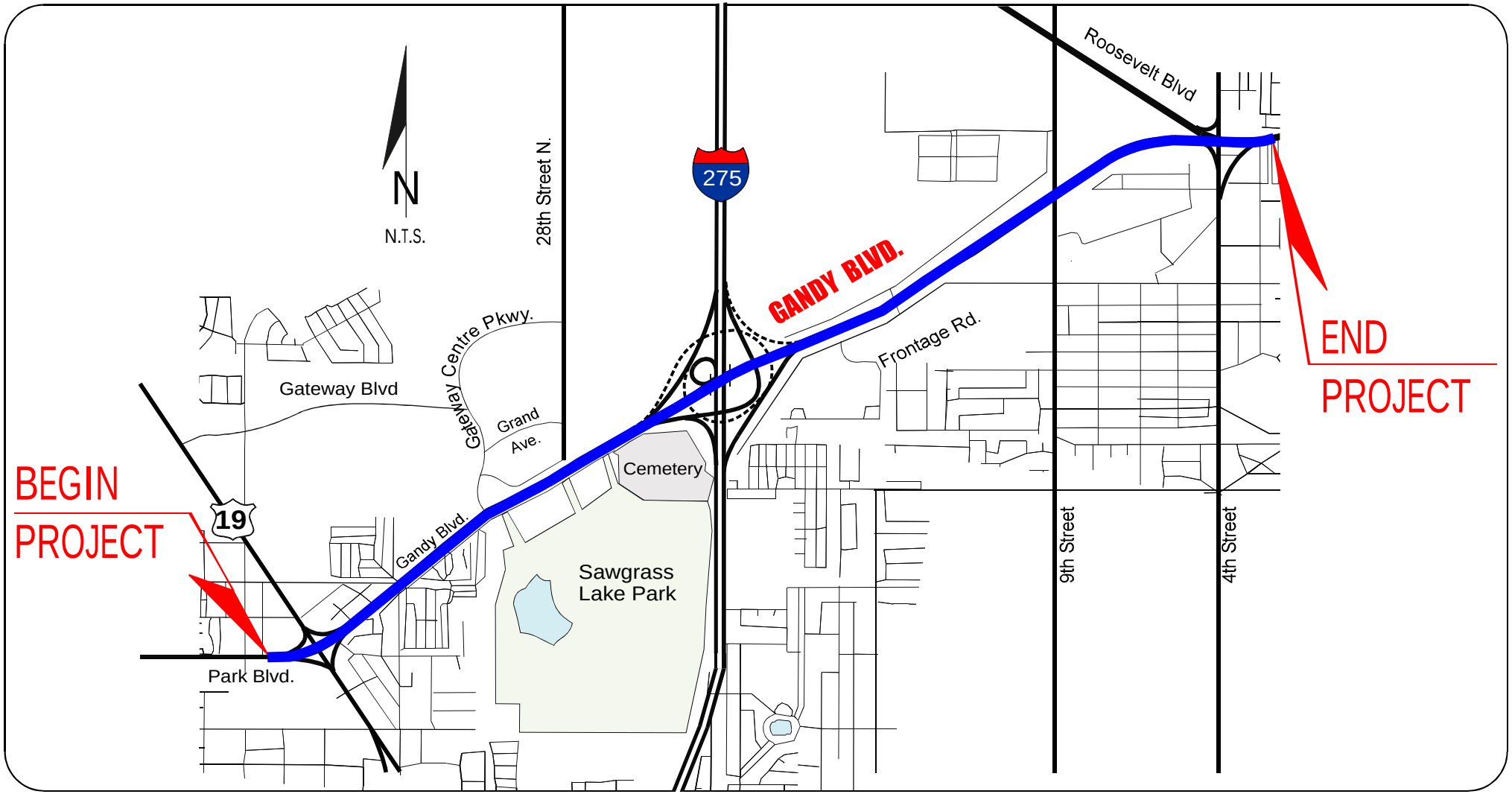

LEGEND

- Project Study Limits
- River / Water
- 694 State Road
- 19 U.S. Route
- 275 Interstate

FLORIDA DEPARTMENT OF TRANSPORTATION

SR 694 (GANDY BOULEVARD)

PD&E STUDY

From US 19 to East of 4th Street

Pinellas County, Florida

Project Location Map

W.P.I. SEG. NO. : 256931 1

FIGURE 1.1

SECTION 2
EXISTING CONDITIONS

An extensive data collection effort was required to evaluate existing conditions for the Gandy Boulevard study corridor. The variety of data collected was used to develop significant information regarding traffic and safety conditions within the study corridor. This section discusses the data collected and how it was used to determine the existing conditions for the study.

2.1 Existing Traffic Volume Data

2.1.1 Traffic Count Data

Traffic counts were conducted at numerous locations within the study corridor. Initial traffic counts were collected by MSI during the first and second week of March 2000 (March 1 through March 8). Additional counts were collected by FDOT over a period from September to December 2000. The approach volume counts collected by MSI were 7-day counts, whereas the approach volume counts collected by FDOT were 3-day counts. In order to have a consistent methodology for all count locations, only three of the seven days of MSI counts were used in this study. The raw traffic count data provided by MSI and FDOT are provided in **Appendix A**. The type and location of the traffic counts are described below. The traffic count locations are also displayed on **Figure 2.1**.

3-Day Approach Volumes for Key Intersections

- Gandy Boulevard at US 19
- Gandy Boulevard at Grand Avenue
- Gandy Boulevard at Interstate 275
- Gandy Boulevard at Frontage Road
- Gandy Boulevard at 9th Street North
- Gandy Boulevard at Roosevelt Boulevard

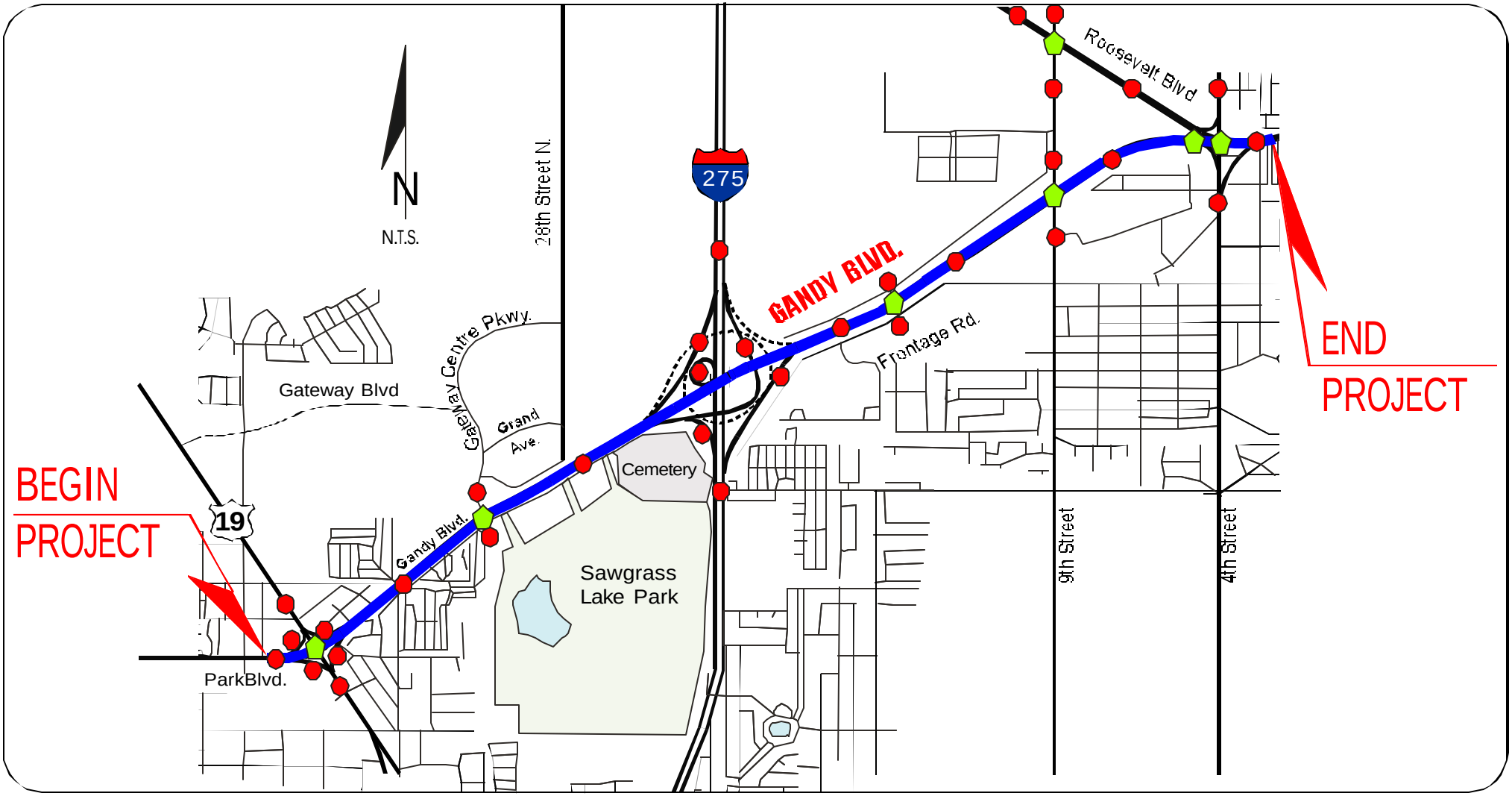

LEGEND

- ProjectStudy Limits
- River / Water
- 694 State Road
- 19 U.S.Route
- 275 Interstate
- 72-HourCount
- TurningMovement Count

FLORIDA DEPARTMENT OF TRANSPORTATION

SR 694 (GANDY BOULEVARD)

PD&E STUDY

FromUS 19toEastof 4thStreet
PinellasCounty,Florida

Traffic Count Locations

W.P.I.SEG.NO.:2569311

FIGURE2.1

- Gandy Boulevard at 4th Street North
- Roosevelt Boulevard at 9th Street North

AM and PM Peak Period Turning Movement Counts

- Gandy Boulevard at US 19 Ramps
- Gandy Boulevard at Grand Avenue
- Gandy Boulevard at Frontage Road
- Gandy Boulevard at 9th Street North
- Gandy Boulevard at Roosevelt Boulevard
- Gandy Boulevard at 4th Street North
- Roosevelt Boulevard at 9th Street North

Along with the turning movement counts, bike and pedestrian counts were also collected at five of the key intersections within the study area. The pedestrian and bike counts were collected on various weekdays during March and April 2000 from 7:00 AM to 9:00 AM and from 4:00 PM to 6:00 PM. The data collected revealed that pedestrian and bike activity in the corridor is very low. The bike and pedestrian counts are presented in **Table 2.1**.

2.1.2 Annual Average Daily Traffic Volumes

In order to calculate the existing (2000) AADT volumes, the 3-day traffic count data were first averaged. At any given count location, any daily count which was abnormally high or low compared to the other counts at that location was not included in the average. Next the current (1999) FDOT seasonal factor and axle adjustment factor was applied to each averaged daily volume to arrive at the AADT. The seasonal and axle adjustment factors that were used are provided in **Appendix B**. The seasonal adjustment factor varied by count location as the counts were not all collected during the same week. The axle adjustment factor was 0.97 for all counts, except for those counts collected at the Interstate 275 ramps where a factor of 0.96 was applied. The calculations to determine the AADT volumes are provided in Appendix B. The existing (2000) AADT volumes resulting from these calculations are displayed on **Figure 2.2**.

Table 2.1
Bike and Pedestrian Counts
Total for AM and PM Peak Hours

Segment	Bike	Ped
Gandy Blvd at Grand Ave	2	1
Gandy Blvd at 9th St N	6	6
Roosevelt Blvd at 9th St N	4	12
Gandy Blvd and 4th St N	2	1
Gandy Blvd at Roosevelt Blvd	6	1

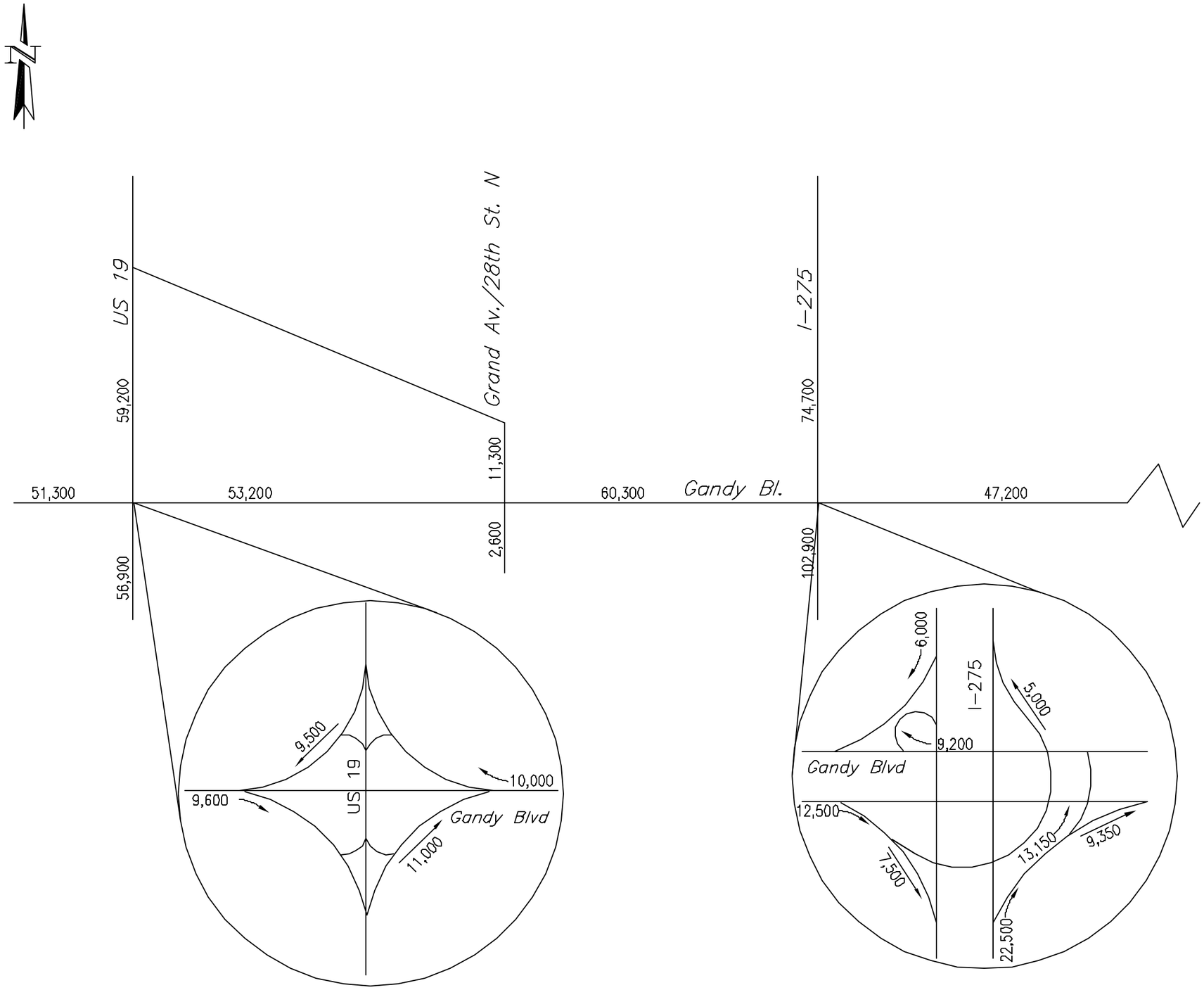

Florida Department of Transportation

SR 694 (Gandy Boulevard)

From US 19 to East of 4th Street
Pinellas County, Florida

Existing (2000) Annual Average Daily Traffic Volumes*

Plate A - Western Segment

LEGEND

12,500 → Directional AADT Volume

47,200 Two-Way AADT Volume

* AADT volumes were calculated by applying seasonal and axle adjustment factors to raw traffic counts collected 3/2000 through 12/2000. Volumes are rounded to the nearest hundred.

NOT TO SCALE

FPN#: 256931-1-32-01
DWG Date: February 12, 2002

Figure 2.2a

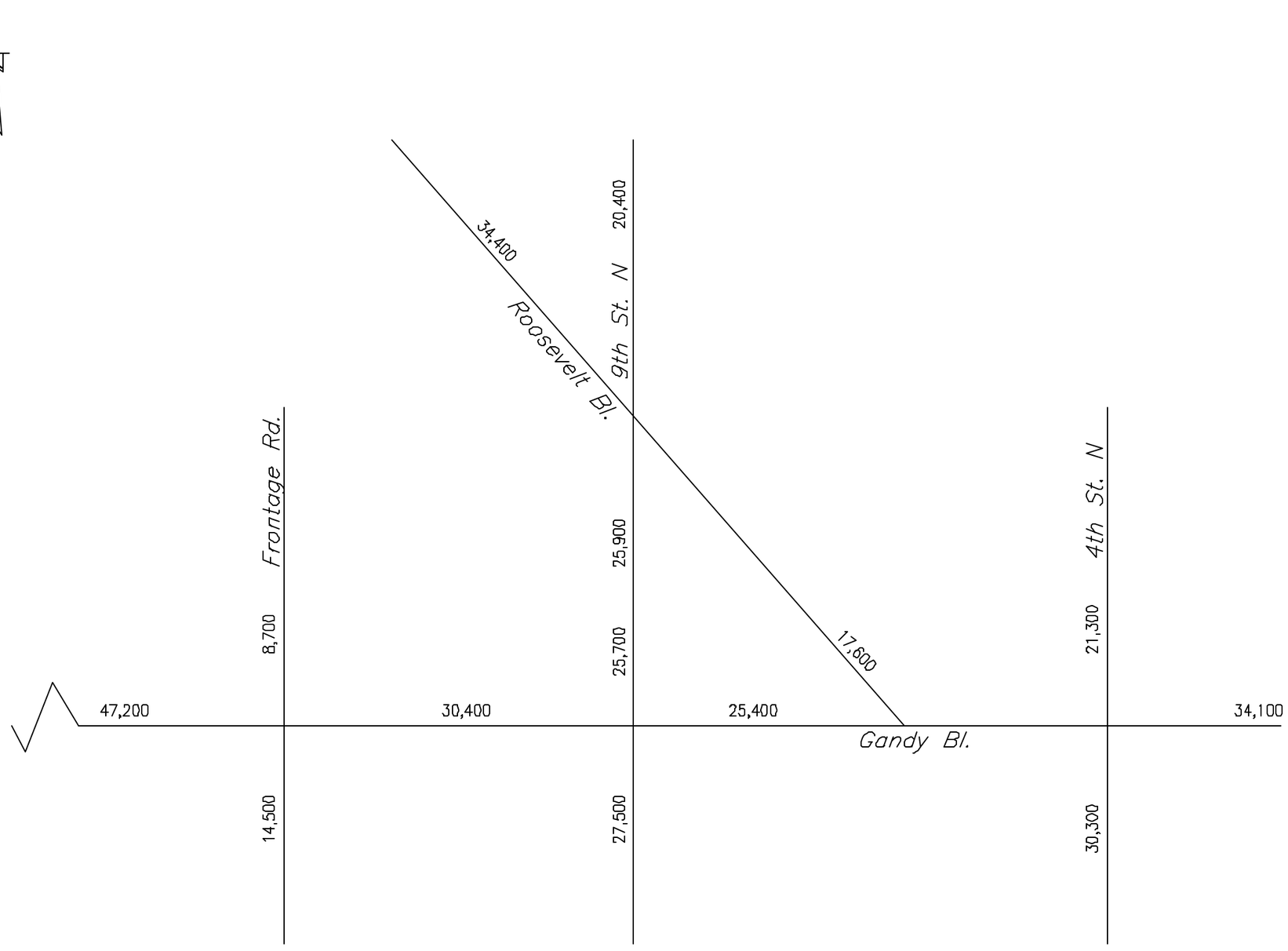

Florida Department of Transportation

SR 694 (Gandy Boulevard)

From US 19 to East of 4th Street
Pinellas County, Florida

Existing (2000) Annual Average Daily Traffic Volumes*

Plate B - Eastern Segment

LEGEND

25,400 Two-Way AADT Volume

* AADT volumes were calculated by applying seasonal and axle adjustment factors to raw traffic counts collected 3/2000 through 12/2000. Volumes are rounded to the nearest hundred.

NOT TO SCALE

FPN#: 256931-1-32-01
DWG Date: January 12, 2001

Figure 2.2b

2.1.3 Peak Hour Volumes

The existing peak hour volumes for the study intersections were developed from the turning movement counts collected by MSI and FDOT. The raw turning movement counts are listed in Appendix A. As this data indicates, the AM and PM peak hours vary slightly for each intersection. However, generally the AM and PM peak hours occur from 7:30 AM to 8:30 AM and from 4:45 PM to 5:45 PM.

Once the AM and PM peak hours for the corridor were determined, the raw turning movement counts were examined to determine the percentages of the approach volume to each intersection making the various possible turning movements. Next, using the AADTs created from the MSI and FDOT counts, approach volumes for the 30th highest hour were calculated. This was accomplished by applying a K_{30} and D_{30} supplied by FDOT to the AADTs. The resulting approach volumes were then distributed using the percentages calculated from the raw turning movement counts. The K_{30} and D_{30} (refer to section 2.1.4) and turning movement percentages were then reconciled with traffic counts to make the approach and departure percentages and volumes for each intersection more closely resemble the observed percentages and volumes from the raw turning movement counts. The K_{30} and D_{30} and turning movement percentages were also reconciled so that the approach/departure volumes from one intersection were consistent with the next intersection where there are no access points between intersections. Because the observed traffic volumes on Gandy Boulevard were the highest near the Interstate 275 interchange, this is the control point against which other intersection approach/departure volumes were reconciled. The calculations used to arrive at the final AM and PM turning movements are provided in Appendix B. The process that was used follows the FDOT Design Traffic Handbook procedures for converting estimated average annual daily traffic (AADT) to design hour volumes (DHV). The existing (2000) AM and PM peak hour turning movement volumes resulting from these calculations are displayed on **Figure 2.3 and Figure 2.4**.

2.1.4 Existing Traffic Characteristics

To determine existing and future year peak period traffic conditions, it was necessary to decide upon a set of design traffic factors. The factors that needed to be determined included K_{30}, D_{30}, and T-Peak. The K_{30} and D_{30} factors are the percentage of daily traffic volumes occurring during

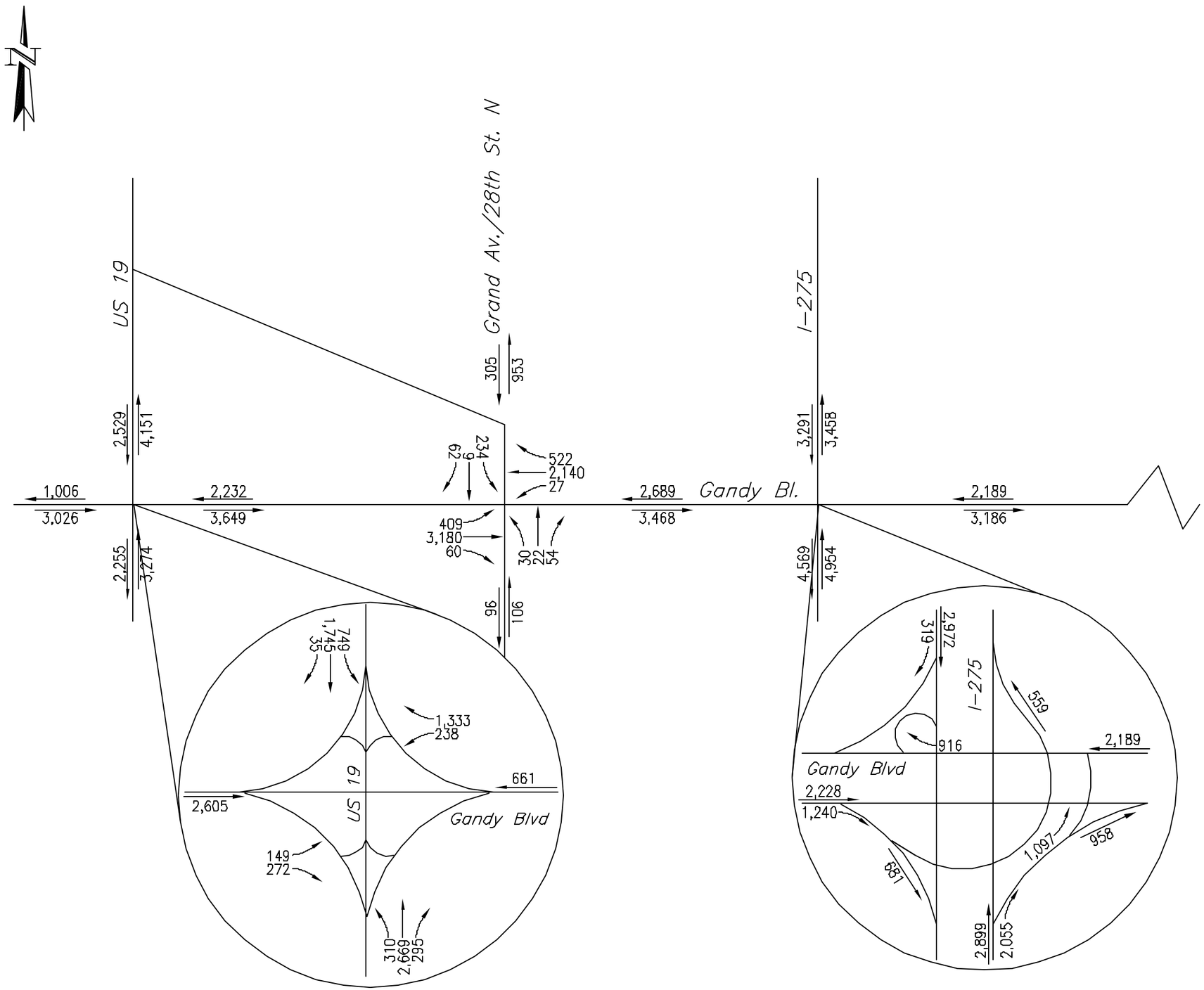

Florida Department of Transportation

SR 694 (Gandy Boulevard)

From US 19 to East of 4th Street
Pinellas County, Florida

Existing (2000) AM Peak Hour Volumes

Plate A - Western Segment

NOT TO SCALE

FPN#: 256931-1-32-01
DWG Date: January 12, 2001

Figure 2.3a

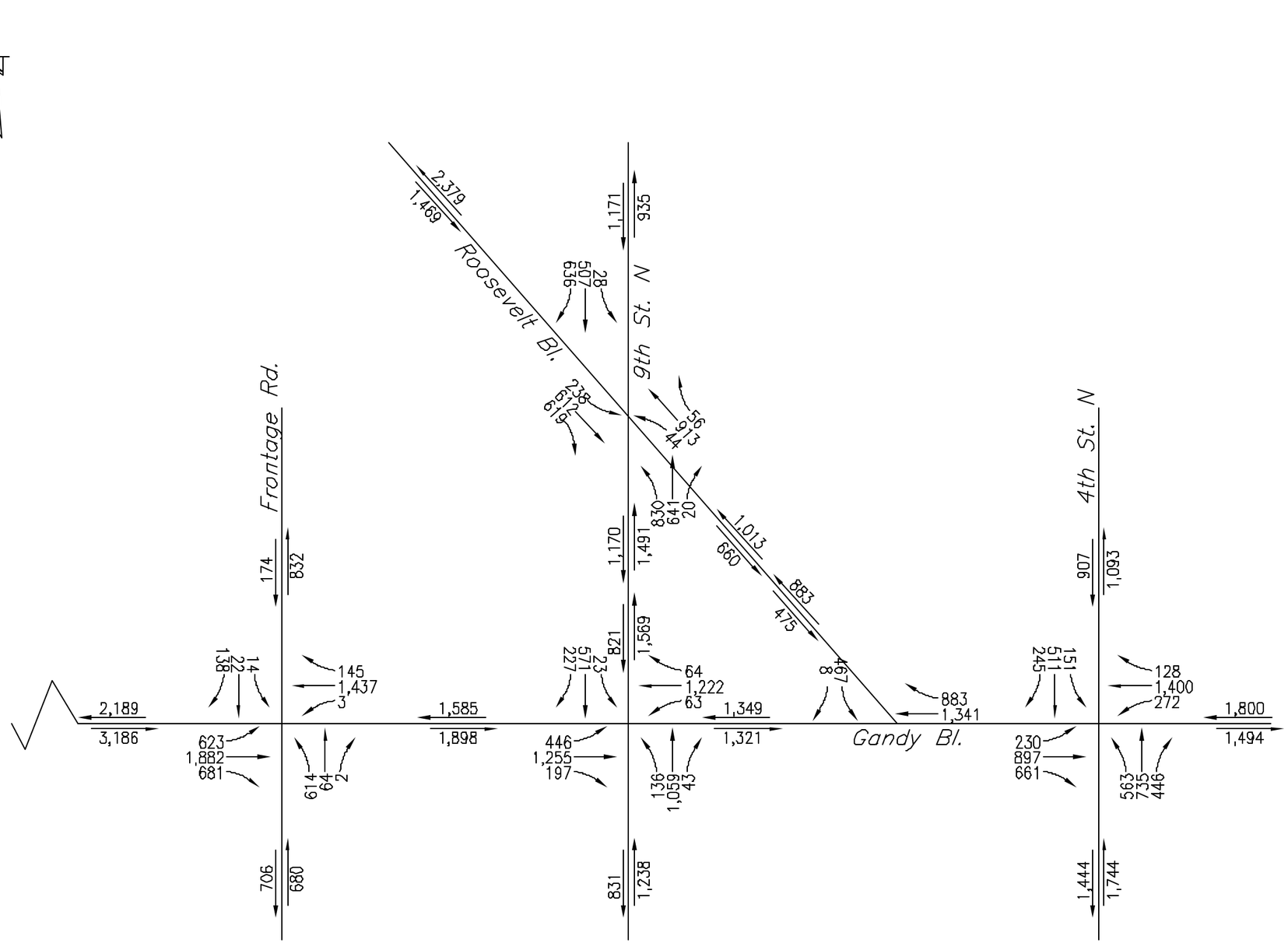

Florida Department of Transportation

SR 694 (Gandy Boulevard)

From US 19 to East of 4th Street
Pinellas County, Florida

Existing (2000) AM Peak Hour Volumes

Plate B - Eastern Segment

NOT TO SCALE

FPN#: 256931-1-32-01
DWG Date: February 12, 2002

Figure 2.3b

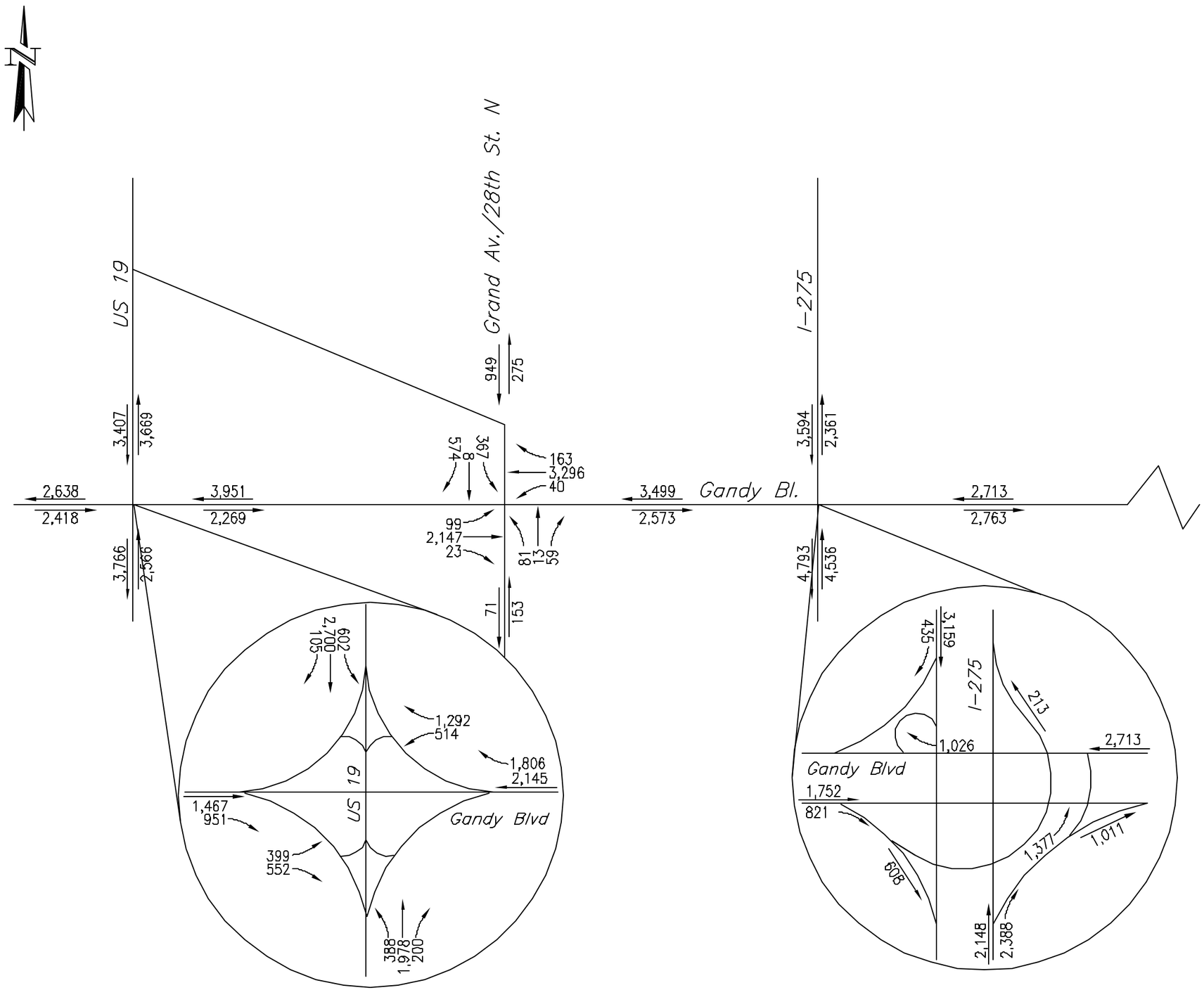

Florida Department of Transportation

SR 694 (Gandy Boulevard)

From US 19 to East of 4th Street
Pinellas County, Florida

Existing (2000) PM Peak Hour Volumes

Plate A - Western Segment

NOT TO SCALE

FPN#: 256931-1-32-01
DWG Date: January 12, 2001

Figure 2.4a

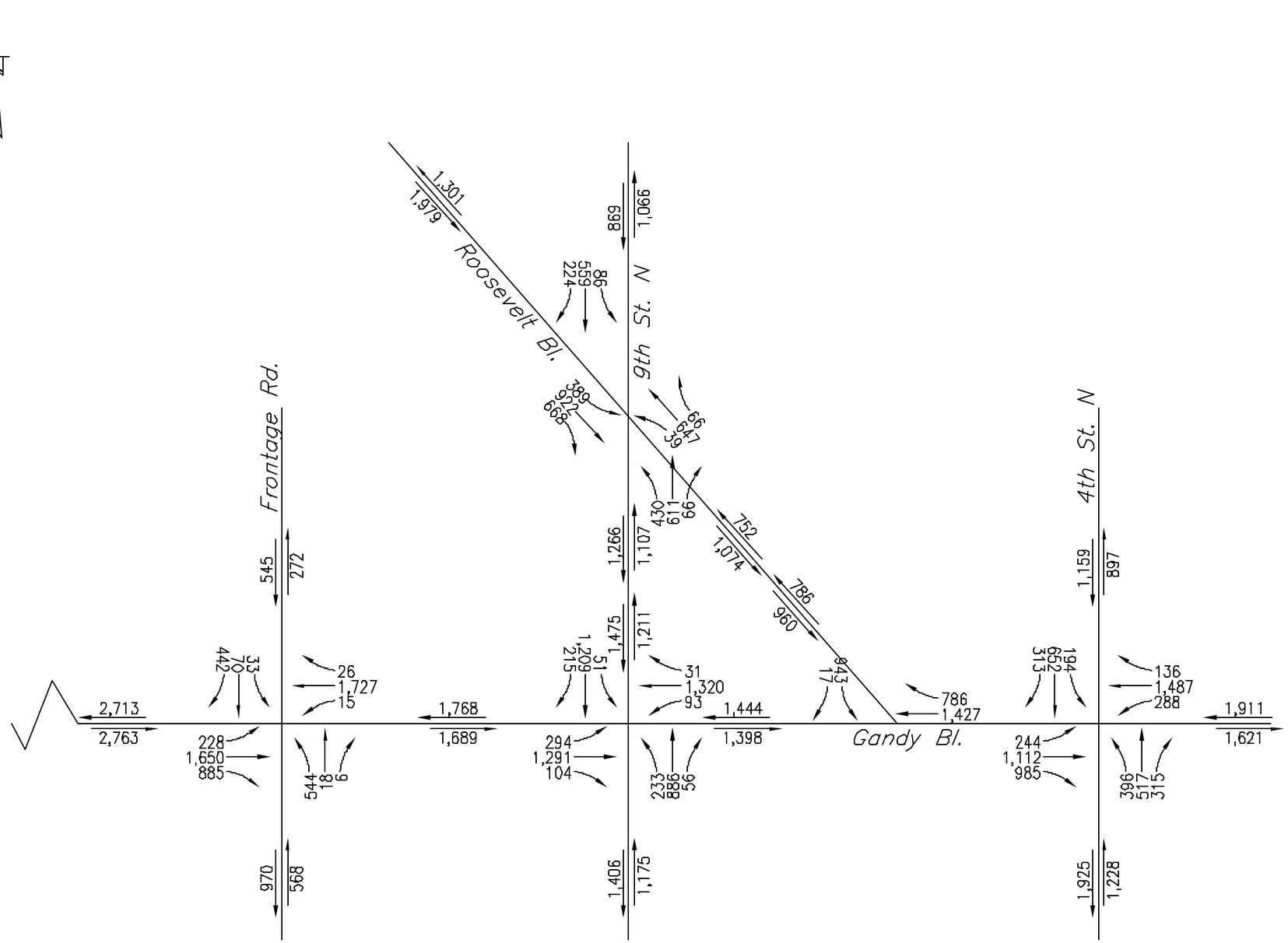

Florida Department of Transportation

SR 694 (Gandy Boulevard)

From US 19 to East of 4th Street
Pinellas County, Florida

Existing (2000) PM Peak Hour Volumes

Plate B - Eastern Segment

NOT TO SCALE

FPN#: 256931-1-32-01
DWG Date: February 12, 2002

Figure 2.4b

the peak hour and the proportion of traffic traveling in the peak direction in the 30th highest hour of the year. This is the amount of traffic that a roadway is typically designed to accommodate. The T-Peak factor is the percentage of truck traffic during the peak hours. T-Peak can be estimated as half of T-Daily, the percentage of truck traffic for 24 hours. T-Peak is used in the HCS Level of Service Analysis.

The design traffic factors used in this report were determined through a process that involved several steps and several sources of data. The starting point was a set a factors from FDOT count sites in the study area. Separate sets of factors were supplied for arterial roadways and the interstate. The factors from these count sites were averaged and then compared to the design traffic factors used in the Ulmerton Road PD&E Study and the Interstate 275/Ulmerton Road Interchange Modification Report, two recent studies in the general area of the study corridor. The factors used in these two recent studies have been approved by the Federal Highway Administration (FHWA). For the interstate, a decision was made to use the same factors as were used in the two prior studies. This was done to be consistent with these studies since they cover the same segments of roadway as the current study. However, since the previous studies did not cover Gandy Boulevard, it was decided that the design traffic factors for arterials should be determined from the FDOT count site data. Thus, the average K_{30} and D_{30} values from the FDOT count sites along Gandy Boulevard and Roosevelt Boulevard were chosen as the appropriate factors. For the T-Peak value for arterials, the data from FDOT count sites was not used. Rather a value of 3.5 was chosen in order to be consistent with the T-Peak value for the interstate. The design traffic factors chosen for the Gandy Boulevard PD&E are presented in **Table 2.2**. Comparison of these values with the acceptable K_{30} and D_{30} values from the FDOT Design Traffic Handbook indicates that these values are reasonable and within the acceptable range.

2.1.5 Existing Roadway Characteristics

The Pinellas County Comprehensive Plan, Transportation Element indicates that Gandy Boulevard from US 19 to 4th Street North is a four-lane divided principal arterial. The average daily level of service standard for this facility is C, but it is D for the peak hour. The

Table 2.2
Design Traffic Factors Comparison and Recommendations

Traffic Count Site Analysis					
FDOT Site	**Description**	**Year**	**K_{30}**	**D_{30}**	**T-Daily**
15-0039	Gandy Bl E of US 19	1998	10.02%	57.39%	6.23%
15-5087	Gandy Bl E of 9th St	1998	10.02%	57.39%	5.66%
15-0010	Gandy Bl E of 4th St	1998	10.02%	57.39%	6.02%
Average			*10.02%*	*57.39%*	*5.97%*
15-0014	Roosevelt Bl E of 9th St	1998	10.02%	57.39%	3.69%
15-0011	Roosevelt Bl E of I-275	1998	10.02%	57.39%	4.73%
15-0078	Roosevelt Bl S/E of Ulmerton Rd	1998	10.02%	57.39%	4.45%
Average			*10.02%*	*57.39%*	*4.29%*
15-0106	I-275 N of 54th Ave N	1998	9.69%	55.16%	6.18%
15-0087	I-275 N of Gandy Bl	1998	9.69%	55.16%	5.03%
15-0079	I-275 N of Roosevelt Bl	1998	9.69%	55.16%	9.13%
Average			*9.69%*	*55.16%*	*6.78%*
Overall Average			*9.91%*	*56.65%*	*5.68%*
Comparison with Other Studies					
Ulmerton Rd PD&E Study (Peak)		1998	9.22%	52.21%	3.50%
I-275/Ulmerton Rd IMR (Daily)		1999	9.22%	52.21%	7.00%
	(Peak)				3.50%
FDOT Acceptable Values- Urban Arterial[1]					
	Low		9.20%	50.80%	
	Average		10.20%	57.90%	
	High		11.50%	67.10%	
Recommended Peak Hour Factors for Gandy Blvd PD&E Study (Pinellas)					
Arterials (Peak)			**10.02%**	**57.39%**	**3.50%**
Interstates (Peak)			**9.22%**	**52.21%**	**3.50%**
Other Factors					
MOCF (Arterials)		0.95			
MOCF (Interstates)		0.98			
PHF (All)		0.95			

1. Source: FDOT Design Traffic Handbook, 1997.

transportation system in the Gandy corridor can be described as a roadway with a wide right-of-way and few unsignalized access points. Major cross streets along the corridor include US 19, Interstate 275, 9th Street, Roosevelt Boulevard, and 4th Street. Most of the private property owners along this section of the road do not have direct access to the roadway. Minor intersections include Grand Avenue (at Gateway Center), the Interstate 275 signalized ramp and Frontage Road (at approximately 16th Street). Transit service is provided by the Pinellas Suncoast Transit Authority (PSTA). Local and commuter bus routes serve this corridor. The existing lane configuration for the study corridor is depicted in **Figure 2.5**.

2.1.5.1 Roadway Segments

Gandy Boulevard, from US 19 to the east, has two lanes plus one auxiliary lane in each direction. The auxiliary lane is maintained until the western Interstate 275 ramps, where it becomes part of the on/off ramps for the interchange. Two through lanes in each direction pass under Interstate 275 and continue to the east until just before the 4th Street intersection. Three lanes in each direction pass through the Gandy Boulevard/4th Street intersection. These lanes taper to two lanes per direction near the St. Petersburg Kennel Club.

Interstate 275 has three lanes in each direction from 54th Avenue North to Gandy Boulevard. North of Gandy Boulevard it has two lanes in each direction, with one auxiliary lane in each direction for most of the distance from Gandy Boulevard to Roosevelt Boulevard. Because this is a fully access controlled interstate facility, no property owners along this corridor have direct driveway access to the roadway.

Roosevelt Boulevard is an at grade arterial. Connecting Interstate 275 and Gandy Boulevard at a near 45-degree angle, Roosevelt Boulevard operates with two lanes plus one auxiliary lane in each direction west of Interstate 275. East of Interstate 275 it is two lanes in each direction to 4th Street. This roadway provides a direct route between northeast St. Petersburg and the Carillon/Mid-Pinellas County employment centers along Ulmerton Road.

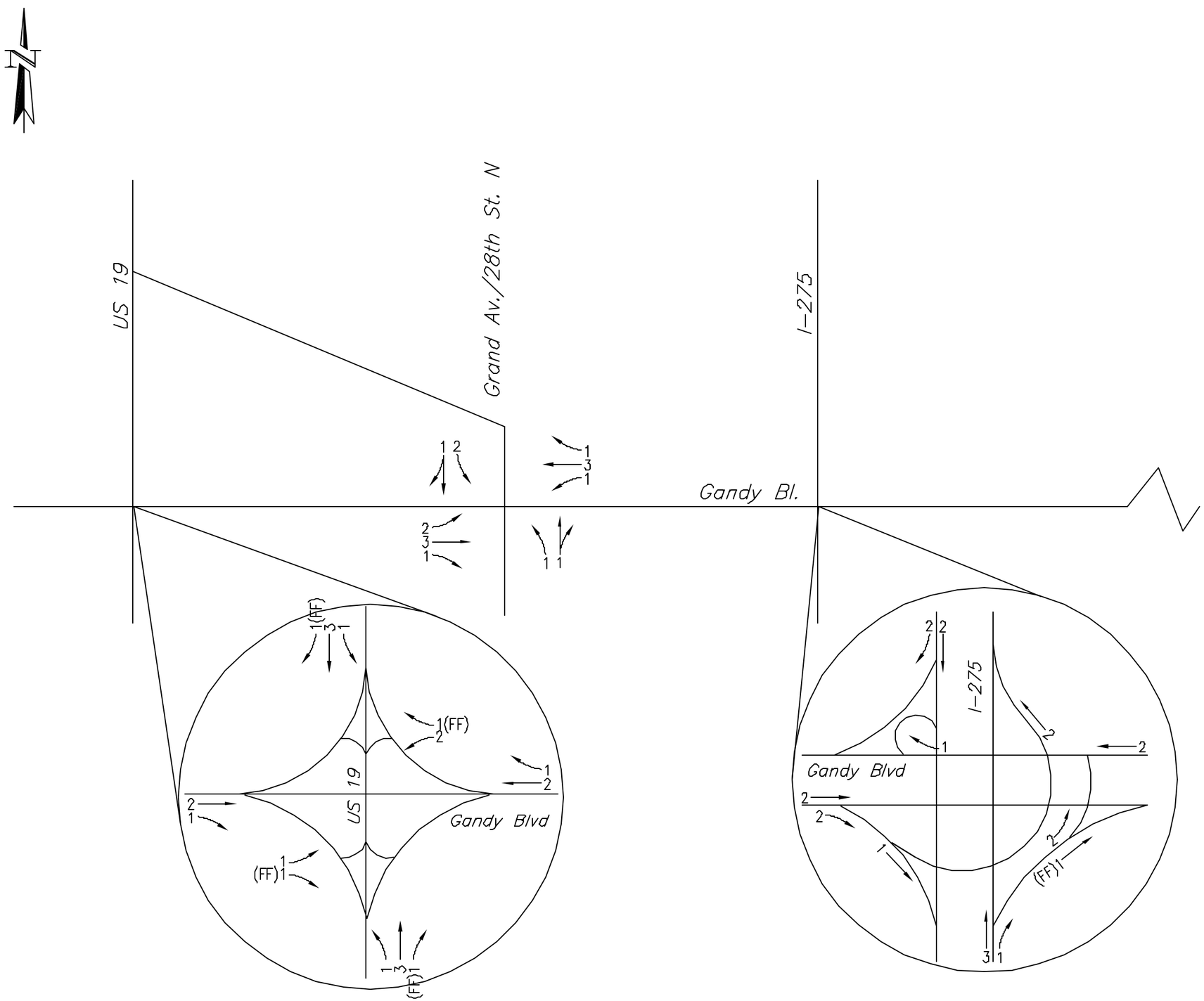

Florida Department of Transportation

SR 694 (Gandy Boulevard)

From US 19 to East of 4th Street
Pinellas County, Florida

Existing Lane Configuration for Study Corridor

Plate A - Western Segment

LEGEND

(FF) Free Flow Movement

2 ⟶ Number of Lanes

NOT TO SCALE

FPN#: 256931-1-32-01
DWG Date: January 12, 2001

Figure 2.5a

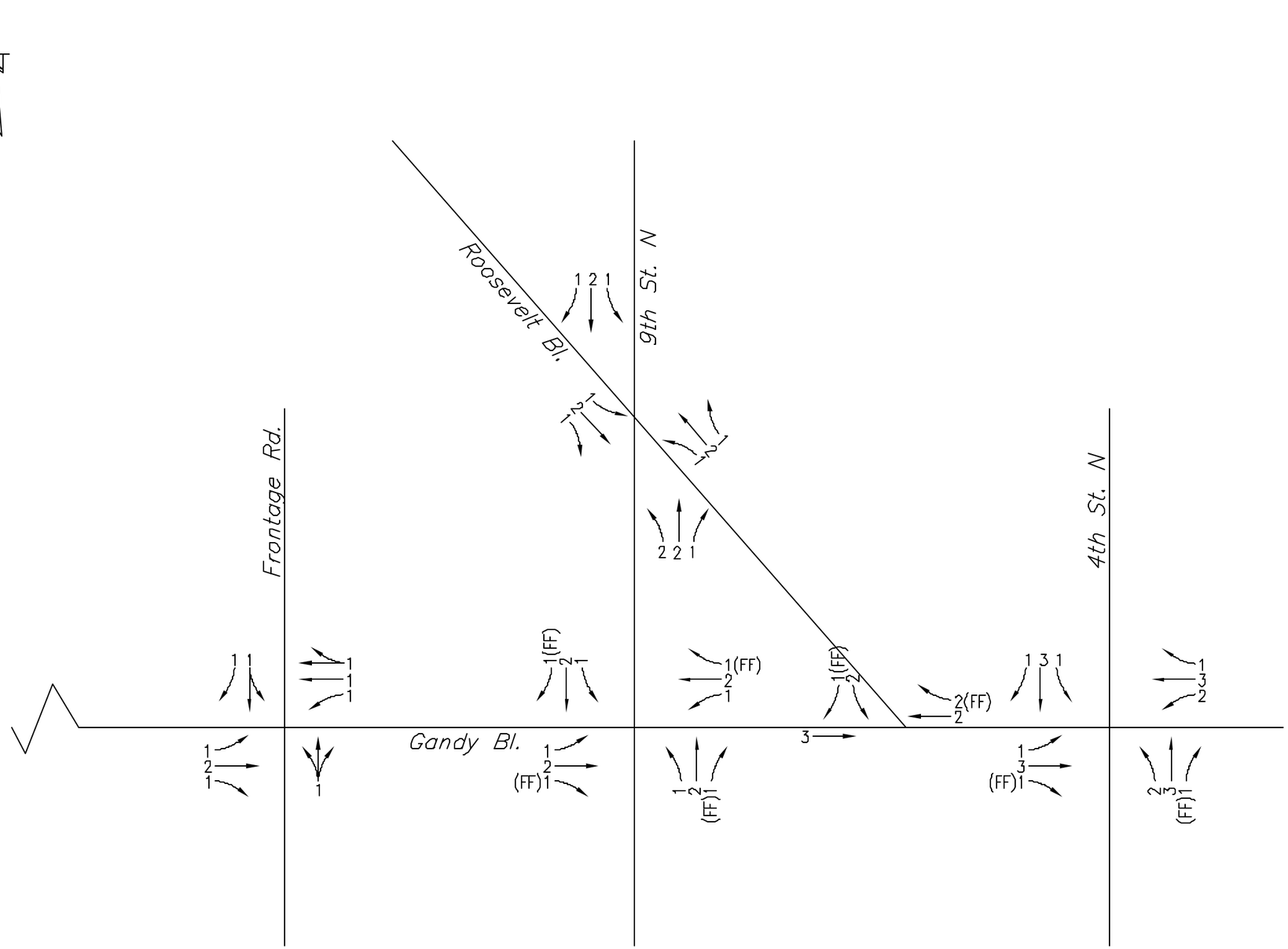

Florida Department of Transportation

SR 694 (Gandy Boulevard)

From US 19 to East of 4th Street
Pinellas County, Florida

Existing Lane Configuration for Study Corridor

Plate B - Eastern Segment

LEGEND

(FF) Free Flow Movement

2 → Number of Lanes

NOT TO SCALE

FPN#: 256931-1-32-01
DWG Date: February 12, 2002

Figure 2.5b

2.1.5.2 Intersections and Turn Lanes

As mentioned previously, major cross streets along the corridor include US 19, Interstate 275, 9th Street, Roosevelt Boulevard, and 4th Street. The intersection of US 19 and Gandy Boulevard is grade separated with US 19 flowing underneath Gandy Boulevard. However, there is a signalized intersection involving US 19 and two Gandy ramps. Similarly, the intersection of Interstate 275 and Gandy Boulevard is grade separated with a signalized intersection occurring at Gandy Boulevard and the northbound Interstate 275 off ramp. The intersection of Gandy Boulevard and 9th Street, as well as the intersection of Gandy Boulevard and 4th Street, is at grade. The intersection at 9th Street has two through lanes, a single left turn lane, and a channelized right turn lane in each of the four directions. The intersection at 4th Street has three through lanes in each of the four directions. Both the eastbound and northbound approaches have channelized right turn lanes, and the westbound and northbound approaches both contain dual left turn lanes to accommodate heavy left turn volumes. This intersection is complicated by the intersection of Roosevelt Boulevard and Gandy Boulevard which is less than 0.10 miles to the west of the 4th Street and Gandy Boulevard intersection. This effectively creates a five-point intersection.

Minor intersections include Grand Avenue (at Gateway Center) and Frontage Road. The Grand Avenue intersection contains three through lanes in the eastbound and westbound directions as well as dual left turns in the eastbound and southbound directions. The Frontage Road intersection has only one lane in the northbound direction to serve traffic going left, right, and through. This, combined with the large amount of traffic attempting to use northbound Frontage Road as a shortcut, results in an extremely long queue at the northbound approach during the PM peak. The southbound direction also has one lane for all movements, but this lane is wide enough to effectively serve as two lanes. Thus, while this road does experience a significant queue, it is not as severe as the one in the northbound direction.

2.1.6 Transit Service

Public transit service in the Gandy Boulevard corridor is provided by the PSTA. Route 74 serves the majority of the study corridor by traveling east/west via Park Boulevard and Gandy Boulevard. Major stops along the route include the Indian Rocks Shopping Center, the Seminole Mall, Park 66 Shopping Center, the Pinellas Parkside Mall and the Gateway Mall. Headways on Route 74 typically are 30 minutes in the peak periods and 60 minutes in the off-peak periods of the day. Hours of operation are from 5:15 AM to 8:45 PM Monday through Friday. Limited weekend service is also provided.

Other PSTA routes provide connections along the Gandy corridor. The Pinellas Parkside Mall on the east end of the corridor is served by PSTA Routes 11, 19, 52, 74, 75 and 444 which provide connections to Pinellas Park and north St. Petersburg. Route 96 provides peak period, weekday commuter service along Interstate 275. Routes 59 and 99 provide additional north-south service along 9th Street. Route 4 provides service along 4th Street to northeast St. Petersburg and Route 100X provides commuter services to Tampa from the Gateway Mall via Gandy Boulevard east of 4th Street.

2.2 Crash Data

To evaluate safety in the study corridor, accident reports were collected for the five-year time period between 1994 and 1998 from the FDOT District 7 Traffic Operations Department. Data for 1999 was not available at the time of this report. Accidents were classified into one of two categories: those occurring at an intersection and those occurring along a roadway segment. If an accident occurred within 250 feet of an intersection, it was reported as an intersection accident; otherwise, it was reported as a roadway segment accident.

This data was analyzed to determine the characteristics of crashes that occurred within the study corridor. **Tables 2.3 and 2.4** summarize the crash data, with Table 2.3 detailing accidents at intersections and Table 2.4 detailing accidents along roadway segments**.** FDOT accident data was available only for a limited number of intersections within the study area. Therefore, data is only presented for these intersections.

Table 2.3
Accident Summary for Intersections 1994-1998

Characteristics	Gandy Blvd @ US 19						Gandy Blvd @ I-275						Gandy Blvd @ 4th St						Roosevelt Blvd @ 9th St*					
	1994	1995	1996	1997	1998	Total	1994	1995	1996	1997	1998	Total	1994	1995	1996	1997	1998	Total	1994	1995	1996	1997	1998	Total
Pavement Conditions																								
Dry	22	26	22	17	14	101	15	21	22	17	34	109	25	34	23	28	32	142	17	13	9	10	12	61
Wet	0	6	3	2	0	11	4	6	3	7	8	28	4	5	4	7	3	23	3	3	0	0	1	7
Slippery	0	1	0	0	0	1	1	0	0	1	0	2		0	0	0	0	0	1	0	0	0	0	1
Unknown	0	0	0	1	1	2	0	0	0	0	0	0	1	1	0	0	0	2	0	0	0	0	0	0
Other	0	0	0	0	0	0	0	0	0	0	0	0		0	1	0	0	1	0	0	0	0	0	0
Total	22	33	25	20	15	115	20	27	25	25	42	139	30	40	28	35	35	168	21	16	9	10	13	69
Light Conditions																								
Day	18	22	15	15	11	81	11	20	15	16	34	96	13	24	17	22	19	95	9	4	2	7	7	29
Night	3	10	10	3	2	28	7	7	9	9	2	34	12	13	9	11	15	60	9	11	7	3	6	36
Dawn	0	1	0	0	0	1	0	0	0	0	2	2	1	0	0	0	0	1	0	0	0	0	0	0
Dusk	1	0	0	1	1	3	0	0	0	0	3	3	2	2	2	0	1	7	1	1	0	0	0	2
Unknown	0	0	0	1	1	2	2	0	1	0	1	4	2	1	0	2	0	5	2	0	0	0	0	2
Other	0	0	0	0	0	0	0	0	0	0	0	0		0	0	0	0	0	0	0	0	0	0	0
Total	22	33	25	20	15	115	20	27	25	25	42	139	30	40	28	35	35	168	21	16	9	10	13	69
Time of Day																								
7:00-9:00 a.m.	1	4	3	5	2	15	0	5	5	6	9	25	2	4	3	6	3	18	2	0	1	3	1	7
4:00-6:00 p.m.	8	11	4	4	4	31	4	6	7	6	12	35	4	10	8	6	6	34	2	6	0	3	6	17
Other	13	18	18	11	9	69	16	16	13	13	21	79	24	26	17	23	26	116	17	10	8	4	6	45
Total	22	33	25	20	15	115	20	27	25	25	42	139	30	40	28	35	35	168	21	16	9	10	13	69
Severity of Accident																								
Crashes Involving Fatalities	0	0	0	0	0	0	2	0	0	1	0	3	0	0	0	1	3	4	0	0	0	0	0	0
Number of fatalities	0	0	0	0	0	0	2	0	0	1	0	3	0	0	0	1	3	4	0	0	0	0	0	0
Crashes Involving Injuries	16	17	15	11	8	67	10	20	15	15	22	82	24	28	20	26	24	122	19	8	6	7	9	49
Number of Injuries	22	29	28	18	13	110	12	31	22	32	31	128	41	49	29	41	51	211	14	13	9	7	15	58
Property Damage Only	6	16	10	9	7	48	8	7	10	9	20	54	6	12	8	8	8	42	2	8	3	3	4	20
Total Crashes	22	33	25	20	15	115	20	27	25	25	42	139	30	40	28	35	35	168	21	16	9	10	13	69
Vehicles Involved																								
Single	0	2	1	1	3	7	9	7	7	5	9	37	2	3	0	0	2	7	0	2	0	0	1	3
Multiple	22	31	24	19	12	108	11	20	18	20	33	102	28	37	28	35	33	161	21	14	9	10	12	66
Total	22	33	25	20	15	115	20	27	25	25	42	139	30	40	28	35	35	168	21	16	9	10	13	69
Type of Accident																								
Rear-end	17	24	15	11	9	76	6	12	9	13	19	59	5	13	6	9	13	46	4	9	4	6	4	27
Left Turn	0	0	2	1	1	4	0	0	0	0	1	1	11	11	10	12	5	49	8	4	4	2	6	24
Right Turn	1	2	0	1	0	4	0	0	0	0	0	0		1	0	0	0	1	0	0	0	0	1	1
Angle	0	1	6	3	1	11	3	2	1	3	6	15	9	8	8	11	13	49	6	0	0	1	0	7
Sideswipe	0	3	1	2	1	7	0	0	2	0	1	3		0	3	2	0	5	2	1	0	0	0	3
Head-on	2	0	0	0	0	2	0	0	0	1	1	2	1	2	0	0	0	3	1	0	0	1	0	2
Utility/Light Pole	0	0	0	0	0	0	4	3	3	3	1	14		1	0	0	0	1	0	0	0	0	0	0
Other Non-Moving Object	0	1	1	0	2	4	3	3	3	0	5	14		1	0	1	0	2	0	0	0	0	2	2
Collision with Pedestrian	0	0	0	0	0	0	0	0	0	1	0	1	1	1	0	0	0	2	0	1	0	0	0	1
Collision with Bicyclist	1	0	0	1	0	2	0	1	0	0	0	1		0	0	0	0	0	0	0	0	0	0	0
Other	1	2	0	1	1	5	4	6	7	4	8	29	3	2	1		4	10	0	1	1	0	0	2
Total	22	33	25	20	15	115	20	27	25	25	42	139	30	40	28	35	35	168	21	16	9	10	13	69

Intersections include a 250' buffer
* 500' buffer
Source District 7 DOT, Traffic Operations Department

Table 2.3
Accident Summary for Intersections 1994-1998

Characteristics	Gandy Blvd @ US 19						Gandy Blvd @ I-275						Gandy Blvd @ 4th St						Roosevelt Blvd @ 9th St*					
	1994	1995	1996	1997	1998	Total	1994	1995	1996	1997	1998	Total	1994	1995	1996	1997	1998	Total	1994	1995	1996	1997	1998	Total
Cause of Accident																								
No Improper Driving	0	1	0	0	0	1	1	0	0	0	1	2	1	0	0	0	0	1	0	0	1	0	0	1
Careless Driving	0	0	0	0	0	0	0	0	0	0	0	0	0	0	0	0	0	0	5	9	3	6	7	30
Failed to yield ROW	0	0	0	0	0	0	0	0	0	0	0	0	0	0	0	0	0	0	13	1	3	1	2	20
Improper Parking	0	0	0	0	0	0	0	0	0	0	0	0	0	0	0	0	0	0	0	0	1	0	0	1
Improper Land Change	0	0	0	0	0	0	0	0	0	0	0	0	0	0	0	0	0	0	2	0	0	0	0	2
Improper Turn	0	0	0	0	0	0	0	0	0	0	0	0	0	0	0	0	0	0	0	1	0	0	2	3
Followed too Closely	0	0	0	0	0	0	0	0	0	0	0	0	0	0	0	0	0	0	0	1	0	1	0	2
Disregarded Traffic Signal	0	0	0	0	0	0	0	0	0	0	0	0	0	0	0	0	0	0	0	1	1	0	1	3
Exceeded Safe Speed	0	0	0	0	0	0	0	0	0	0	0	0	0	0	0	0	0	0	0	0	0	0	0	0
Disregarded Stop Sign	0	0	0	0	0	0	0	0	0	0	0	0	0	0	0	0	0	0	0	0	0	0	0	0
Improper Passing	0	0	0	0	0	0	0	0	0	0	0	0	0	0	0	0	0	0	0	0	0	0	0	0
Drove left of center	0	0	0	0	0	0	0	0	0	0	0	0	0	0	0	0	0	0	0	0	0	0	0	0
Exceeded Stated Speed	0	0	0	0	0	0	0	0	0	0	0	0	0	0	0	0	0	0	0	0	0	0	0	0
Obstructing Traffic	0	0	0	0	1	1	0	0	0	0	0	0	0	0	0	0	0	0	0	0	0	0	0	0
Disregarded other Traffic	16	23	14	12	10	75	14	18	17	17	30	96	14	24	20	22	15	95	0	0	0	0	0	0
Driving wrong side/way	1	3	6	2	4	16	1	1	1	2	3	8	7	11	5	9	12	44	0	0	0	0	0	0
Alcohol &/or Drugs	0	1	0	1	0	2	0	1	0	0	2	3	3	2	0	2	0	7	0	0	0	0	0	0
Other	5	5	5	5	0	20	4	7	7	6	6	30	5	3	3	2	8	21	1	3		2	1	7
Total	22	33	25	20	15	115	20	27	25	25	42	139	30	40	28	35	35	168	21	16	9	10	13	69
Safety Ratio	1.051	1.418	1.065	0.816	0.621		0.795	1.135	1.200	1.121	1.850		2.119	2.400	1.670	1.874	1.675		2.249	1.477	0.841	0.855	1.125	

Intersections include a 250' buffer
* 500' buffer
Source District 7 DOT, Traffic Operations Department

Table 2.4
Accident Summary for Roadway Segments 1994 - 1998

	Gandy Blvd																		Roosevelt Blvd					
	40th St to 34th St						34th St to I-275						I-275 to 4th St						9th St to Gandy Blvd					
Characteristics	**1994**	**1995**	**1996**	**1997**	**1998**	**Total**	**1994**	**1995**	**1996**	**1997**	**1998**	**Total**	**1994**	**1995**	**1996**	**1997**	**1998**	**Total**	**1994**	**1995**	**1996**	**1997**	**1998**	**Total**
Pavement Conditions																								
Dry	6	10	4	13	3	36	9	13	14	17	20	73	15	28	26	46	30	145	4	5	6	5	2	22
Wet	1	0	0	3	0	4	0	6	2	2	3	13	6	8	2	6	5	27	0	0	0	1	1	2
Slippery	0	0	0	0	0	0	0	0	0	0	0	0	0	1	1	0	3	5	0	0	0	0	0	0
Unknown	0	0	0	0	0	0	0	0	1	0	0	1	0	0	0	0	0	0	0	0	0	0	0	0
Others	0	0	0	0	0	0	0	0	0	0	0	0	0	0	0	0	0	0	0	0	0	0	0	0
Total	7	10	4	16	3	40	9	19	17	19	23	87	21	37	29	52	38	177	4	5	6	6	3	24
Light conditions																								
Day	6	8	3	12	0	29	7	9	12	15	18	61	9	22	18	32	21	102	3	2	4	5	2	16
Night	1	1	1	4	3	10	2	10	4	2	4	22	10	13	9	18	15	65	1	3	2	1	1	8
Dawn	0	0	0	0	0	0	0	0	0	1	0	1	1	0	1	0	1	3	0	0	0	0	0	0
Dusk	0	1	0	0	0	1	0	0	0	0	0	0	1	2	1	1	1	6	0	0	0	0	0	0
Unknown	0	0	0	0	0	0	0	0	1	1	1	3	0	0	0	1	0	1	0	0	0	0	0	0
Other	0	0	0	0	0	0	0	0	0	0	0	0	0	0	0	0	0	0	0	0	0	0	0	0
Total	7	10	4	16	3	40	9	19	17	19	23	87	21	37	29	52	38	177	4	5	6	6	3	24
Time of Day																								
7:00-9:00 a.m.	0	1	0	3	0	4	1	2	2	3	3	11	2	4	6	8	4	24	1	0	2	2	0	5
4:00-6:00 p.m.	1	4	2	5	0	12	1	4	4	6	5	20	6	12	3	10	3	34	0	2	1	1	0	4
Other	6	5	2	8	3	24	7	13	11	10	15	56	13	21	20	34	31	119	3	3	3	3	3	15
Total	7	10	4	16	3	40	9	19	17	19	23	87	21	37	29	52	38	177	4	5	6	6	3	24
Severity of Accident																								
Crashes involving Fatalities	0	0	0	0	0	0	0	1	0	0	1	2	0	0	0	0	0	0	0	0	0	0	0	0
Number of fatalities	0	0	0	0	0	0	0	3	0	0	2	5	0	0	0	0	0	0	0	0	0	0	0	0
Crashes involving Injuries	4	7	2	8	2	23	7	12	10	12	11	52	13	30	20	39	25	127	2	4	6	5	3	20
Number of Injuries	4	12	3	12	2	33	20	23	23	18	15	99	18	47	37	68	41	211	3	11	14	8	4	40
Property Damage Only	3	3	2	8	1	17	2	6	7	7	11	33	8	7	9	13	13	50	2	1	0	1	0	4
Total Crashes	7	10	4	16	3	40	9	19	17	19	23	87	21	37	29	52	38	177	4	5	6	6	3	24
Vehicles Involved																								
Single	0	1	0	0	0	1	0	2	2	1	2	7	0	3	0	2	2	7	0	0	0	0	1	1
Multiple	7	9	4	16	3	39	9	17	15	18	21	80	21	34	29	50	36	170	0	5	6	6	2	19
Total	7	10	4	16	3	40	9	19	17	19	23	87	21	37	29	52	38	177	4	5	6	6	3	24
Type of Accident																								
Rear-end	3	5	3	12	1	24	5	10	10	11	9	45	14	18	12	18	16	78	3	4	3	4	2	16
Left Turn	0	0	0	0	1	1	2	1	3	1	3	10	0	4	4	14	10	32	0	0	0	0	0	0
Right Turn	0	0	0	0	0	0	0	0	0	2	0	2	0	0	0	1	0	1	0	0	0	0	0	0
Angle	0	2	0	2	0	4	1	5	0	3	4	13	4	8	12	12	10	46	1	1	2	2	0	6
Sideswipe	4	2	1	1	1	9	0	0	1	1	3	5	2	1	1	1	0	5	0	0	1	0	0	1
Head-on	0	0	0	0	0	0	0	1	0	0	1	2	0	1	0	1	0	2	0	0	0	0	0	0
Utility/Light Pole	0	0	0	0	0	0	0	1	0	0	1	2	0	0	0	0	1	1	0	0	0	0	0	0
Other Non-Moving Object	0	1	0	1	0	2	1	1	1	1	0	4	0	4	0	2	1	7	0	0	0	0	0	0
Collision with Pedestrian	0	0	0	0	0	0	0	0	0	0	0	0	0	0	0	0	0	0	0	0	0	0	0	0
Collision with Bicyclist	0	0	0	0	0	0	0	0	0	0	0	0	0	0	0	0	0	0	0	0	0	0	0	0
Other	0	0	0	0	0	0	0	0	2	0	2	4	1	1	0	3	0	5	0	0	0	0	1	1
Total	7	10	4	16	3	40	9	19	17	19	23	87	21	37	29	52	38	177	4	5	6	6	3	24

Source District 7 DOT, Traffic Operations Department

Table 2.4
Accident Summary for Roadway Segments 1994 - 1998

	Gandy Blvd																		Roosevelt Blvd					
	40th St to 34th St						34th St to I-275						I-275 to 4th St						9th St to Gandy Blvd					
Characteristics	**1994**	**1995**	**1996**	**1997**	**1998**	**Total**	**1994**	**1995**	**1996**	**1997**	**1998**	**Total**	**1994**	**1995**	**1996**	**1997**	**1998**	**Total**	**1994**	**1995**	**1996**	**1997**	**1998**	**Total**
Cause of Accident																								
No Improper Driving	0	0	0	0	0	0	0	0	0	0	0	0	1	1	0	1	0	3	1	0	0	0	0	1
Careless Driving	0	0	0	0	0	0	0	0	0	0	0	0	0	0	0	0	0	0	2	3	2	4	2	13
Failed to yield ROW	0	0	0	0	0	0	0	0	0	0	0	0	0	0	0	0	0	0	1	1	0	0	0	2
Improper Parking	0	0	0	0	0	0	0	0	0	0	0	0	0	0	0	0	0	0	0	0	0	0	0	0
Improper Land Change	0	0	0	0	0	0	0	0	0	0	0	0	0	0	0	0	0	0	0	0	0	0	0	0
Improper Turn	0	0	0	0	0	0	0	0	0	0	0	0	0	0	0	0	0	0	0	0	0	0	0	0
Followed too Closely	0	0	0	0	0	0	0	0	0	0	0	0	0	0	0	0	0	0	0	1	1	0	1	3
Disregarded Traffic Signal	0	0	0	0	0	0	0	0	0	0	0	0	0	0	0	0	0	0	0	0	3	1	0	4
Exceeded Safe Speed	0	0	0	0	0	0	0	0	0	0	0	0	0	0	0	0	0	0	0	0	0	0	0	0
Disregarded Stop Sign	0	0	0	0	0	0	0	0	0	0	0	0	0	0	0	0	0	0	0	0	0	0	0	0
Improper Passing	0	0	0	0	0	0	0	0	0	0	0	0	0	0	0	0	0	0	0	0	0	0	0	0
Drove left of center	0	0	0	0	0	0	0	0	0	0	0	0	0	0	0	0	0	0	0	0	0	0	0	0
Exceeded Stated Speed	0	0	0	0	0	0	0	0	0	0	0	0	0	0	0	0	0	0	0	0	0	0	0	0
Obstructing Traffic	0	0	0	0	0	0	0	0	0	0	0	0	0	0	0	0	0	0	0	0	0	0	0	0
Disregarded other Traffic	6	7	4	13	3	33	9	14	10	17	16	66	13	21	17	30	25	106	0	0	0	0	0	0
Driving wrong side/way	1	2	0	0	0	3	0	2	4	0	3	9	1	10	6	14	7	38	0	0	0	0	0	0
Alcohol &/or Drugs	0	0	0	0	0	0	0	0	1	0	0	1	0	1	0	1	1	3	0	0	0	0	0	0
Other	0	1	0	3	0	4	0	3	2	2	4	11	6	4	6	6	5	27	0	0	0	1	0	1
Total	7	10	4	16	3	40	9	19	17	19	23	87	21	37	29	52	38	177	4	5	6	6	3	24
Safety Ratio	0.128	0.181	0.803	0.293	0.053		0.092	0.191	0.197	0.193	0.225		0.485	0.728	0.616	1.052	0.755		0.320	0.331	0.406	0.382	0.190	

Source District 7 DOT, Traffic Operations Department

In addition to evaluating the characteristics of crashes in the study corridor, safety ratios were calculated for intersections and roadway segments. A safety ratio above 1.0 indicates that an intersection or roadway segment experiences an above average number of accidents. Consequently, traffic safety at this intersection or roadway segment may need to be improved. As a final part of the crash data analysis, the number of property damage only accidents and economic costs were calculated for the traffic accidents along the study corridor. The following subsections examine the results of the crash data analysis for intersections and roadway segments.

2.2.1 Intersections

FDOT crash data was available for three intersections along Gandy Boulevard and one intersection along Roosevelt Boulevard This data is summarized in Table 2.3. The intersection with the highest number of total accidents for the entire five-year period was Gandy Boulevard and 4th Street with a total of 168 accidents. The remaining two intersections along Gandy Boulevard, at US 19 and Interstate 275, had a total of 115 and 139 accidents respectively. The intersection of Roosevelt Boulevard and 9th Street had fewer accidents with a total of 69 accidents for the five-year period. This data is depicted in **Figure 2.6**.

For crashes at intersections, the most common type of accident was a rear-end accident. The data also indicated that the major cause of accidents was disregarding other traffic. Most of the crashes reported occurred during dry conditions and during daylight off-peak hours.

As mentioned earlier, a safety ratio greater than 1.0 indicates an above average number of crashes. The safety ratios for intersections are listed in Table 2.3. As shown below, all study intersections for which data were available experienced a safety ratio of greater than 1.0 at some point during the 1994 to 1998 time period.

Intersections with Safety Ratios Greater than 1.0

- Gandy Boulevard @ US 19 (1994, 1995, and 1996)
- Gandy Boulevard @ Interstate 275 (1995, 1996, 1997, and 1998)

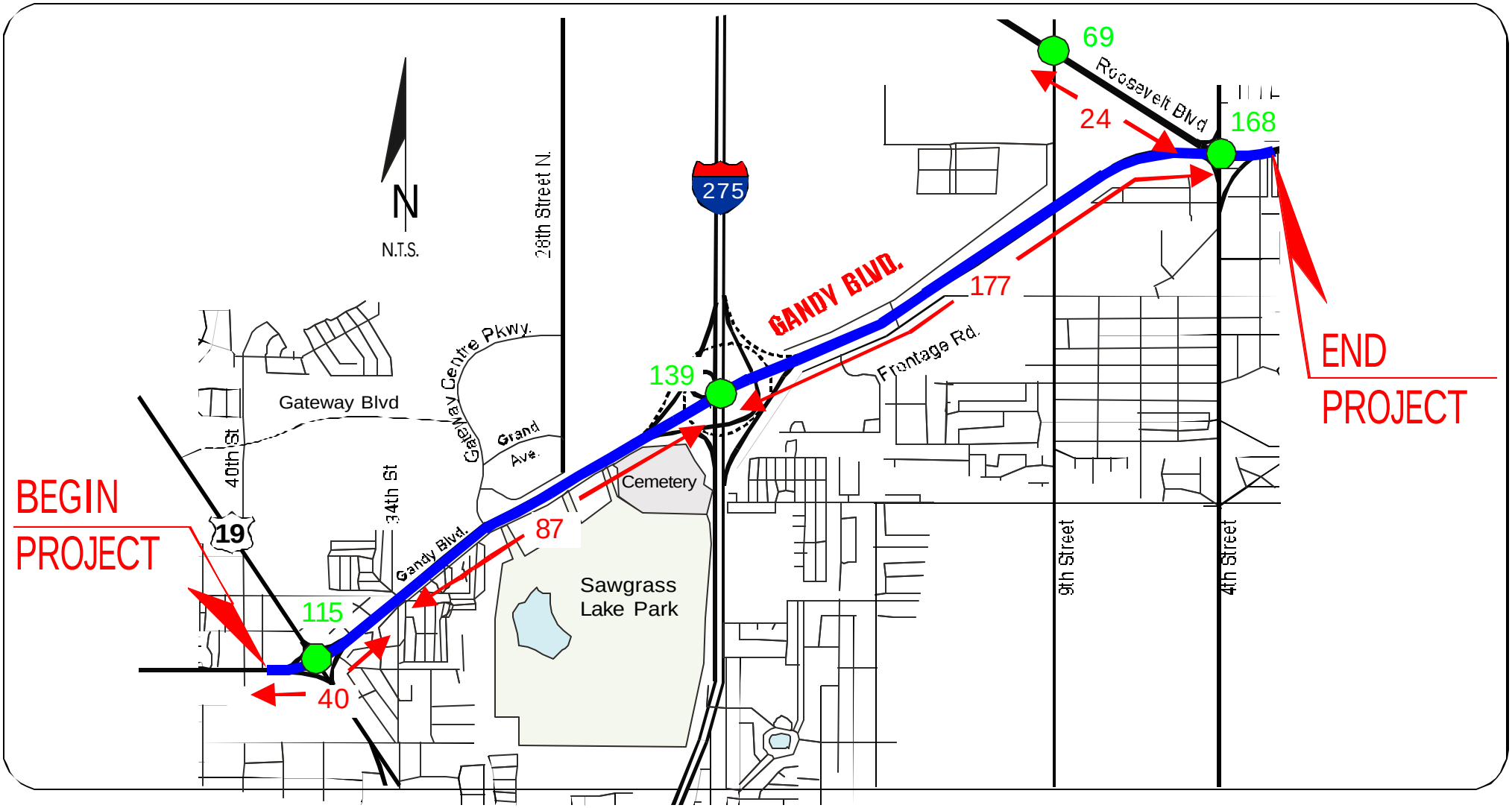

LEGEND

- ProjectStudy Limits
- River / Water
- 694 State Road
- 19 U.S.Route
- 275 Interstate
- Intersection
- Roadway Segment

FLORIDA DEPARTMENT OF TRANSPORTATION

SR 694(GANDY BOULEVARD)

PD&E STUDY

FromUS 19toEastof 4thStreet
PinellasCounty,Florida

Total Number of Crashes 1994-1998

W.P.I.SEG.NO.:2569311

FIGURE2.6

- Gandy Boulevard @ 4th Street North (1994, 1995, 1996, 1997, and 1998)
- Roosevelt Boulevard @ 9th Street North (1994, 1995, and 1998)

It should be noted that the City of St. Petersburg, in coordination with this study, is considering improvements to the intersection of Frontage Road and Gandy Boulevard. This intersection may be relocated approximately 1 block east to 16th Street. This will improve safety in the Gandy Boulevard corridor by moving the intersection further away from the Interstate 275 ramps, thereby improving weaving distances, and by providing a longer queue distance for southbound traffic at this intersection. The effect of this design change was reflected in subsequent operational analyses.

2.2.2 Roadway Segments

FDOT crash data was available for four roadway segments in the study corridor. These four segments are listed below. The data on these segments is presented in Table 2.4.

- Gandy Boulevard from 40th Street to 34th Street
- Gandy Boulevard from 34th Street to Interstate 275
- Gandy Boulevard from Interstate 275 to 4th Street
- Roosevelt Boulevard from 9th Street to Gandy Boulevard

Of the three roadway segments along Gandy Boulevard, the most accidents occurred between Interstate 275 and 4th Street with a total of 177 accidents. The remaining roadway segments along Gandy Boulevard, from 40th Street to 34th Street and from 34th Street to Interstate 275, had 40 accidents and 87 accidents respectively. Roosevelt Boulevard between 9th Street and Gandy Boulevard had 24 total accidents. This data is depicted in Figure 2.6.

The most common type of accident along roadway segments was a rear-end accident. The data also indicated that the major cause of accidents was disregarding other traffic. Most of the crashes reported occurred during dry conditions and during daylight off-peak hours.

The safety ratios for roadway segments in the study corridor are included in Table 2.4. As this table indicates, only one roadway segment experienced a safety ratio of greater than 1.0 during the five year period.

Segments with Safety Ratios Greater than 1.0

- Gandy Boulevard from Interstate 275 to 4th Street (1997)

The total number of accidents divided by the segment length provides the number of accidents per mile for each roadway segment. These values are summarized in **Table 2.5**. Based on the roadway segment data, the highest number of accidents per mile occurred along Gandy Boulevard between Interstate 275 and 4th Street. This segment experienced nearly 21 accidents per mile annually.

2.2.3 Corridor

Data on injuries, fatalities, property damage and economic costs were analyzed by examining the corridor as a whole. No distinction was made between intersections and roadway segments. A total of 12 fatalities and 890 injuries occurred along the Gandy Boulevard study corridor between 1994 and 1998. A total of 595 crashes along the corridor between 1994 and 1998 involved property damage only. Figures regarding the total number of fatalities, injuries and property damage for each segment and intersection per year are included in Tables 2.3 and 2.4.

The FDOT District 7 Traffic Operations Department provided economic cost figures for the study corridor. The economic cost associated with accidents along the study corridor was $33,426,600 for the period between 1994 and 1998. The economic cost data are summarized in **Table 2.6**. It should be noted that although 9th Street North from Gandy Boulevard to Roosevelt Boulevard is part of the study corridor, no economic cost data were available from FDOT on this segment since it is not a state roadway. It should also be noted that the segments that were used to analyze economic costs were different than the segments used to analyze the number and type of accidents. The segments that were used to analyze the economic costs are the same segments

Table 2.5
Accidents Per Mile Analysis

Segment	Length (miles)	Number of Accidents (5-yr total)	Accidents per Mile (5-yr total)	Accidents per Mile (annual avg)
Gandy Boulevard				
40th St to 34th St	0.60	40	66.67	13.33
34th St to I-275	1.20	87	72.50	14.50
I-275 to 4th St	1.70	177	104.12	20.82
Roosevelt Boulevard				
9th St to Gandy Blvd	0.50	24	48.00	9.60

Table 2.6
Economic Costs Associated with Accidents

Location	1994	1995	1996	1997	1998	Total
Gandy Blvd						
40th to US 19	$476,700	$700,200	$286,800	$1,102,400	$201,100	$2,767,200
US 19 to 34th	$596,000	$670,500	$596,000	$614,500	$424,600	$2,901,600
34th to 4th	$2,682,000	$4,693,500	$3,352,500	$5,430,700	$5,043,100	$21,201,800
Total	**$3,754,700**	**$6,064,200**	**$4,235,300**	**$7,147,600**	**$5,668,800**	**$26,870,600**
Roosevelt Blvd						
9th St to Gandy	$1,713,500	$1,415,500	$1,117,500	$1,192,000	$1,117,500	**$6,556,000**
9th St[1]	NA	NA	NA	NA	NA	NA
Corridor Total						$33,426,600

1. Because 9th St. is not a state road, no data was available from FDOT.

for which FDOT collected this data. It was not possible to disaggregate this data such that the segments would match those used to analyze the number and type of accidents.

2.3 Existing Operational Analyses

The Level of Service (LOS) analysis for the study corridor was performed using version 3.2 of the Highway Capacity Software (HCS). This analysis was performed for signalized intersections within the study corridor, for ramps, and also for arterial roadway segments along Gandy Boulevard. The signalized intersection cycle length and phasing data necessary for this analysis came from field observations made by the consultant. A copy of the field notes from this data collection effort is presented in **Appendix C**. **Table 2.7** shows the 1997 Gandy Boulevard AADT and LOS reported by the Pinellas County Metropolitan Planning Organization (MPO). This can be used as a benchmark against which to compare the results of the LOS analysis in this study.

2.3.1 Operational Analyses for Intersections and Ramps

The results of the AM and PM peak hour LOS analyses for intersections and ramps are reported in **Table 2.8** and depicted on **Figures 2.7 and 2.8.** As indicated in Table 2.8, most of the ramp merge and diverge areas within the study corridor are operating at or better than the acceptable LOS D standard adopted by Pinellas County for this roadway during the peak hour. Six of the twelve ramp merge and diverge areas analyzed are operating at LOS C or better during both the AM and PM peak hour. However, the northbound Interstate 275 to Gandy Boulevard ramp is operating at LOS F in the diverge area for both the AM peak hour and PM peak hour. Three other ramps are operating at LOS E in the PM peak hour.

Level of service problems are more pronounced at the signalized intersections. Six of the nine intersections analyzed are operating at LOS F in the AM peak hour. Five of the nine intersections are operating at LOS F in the PM peak hour**.** The intersection of Gandy Boulevard and Roosevelt Boulevard is the only intersection operating at the acceptable LOS D or better in both the AM and PM peak hour.

Table 2.7

1997 Gandy Boulevard AADT and LOS

On Street	AADT	LOS
Gandy Blvd		
US19 to 28th St N	43,498	B
28th St N to I-275	43,498	B
I-275 to 9th St N	24,822	B
9th St N to Roosevelt Blvd	24,822	E
Roosevelt Blvd to 4th St N	33,865	E
Roosevelt Blvd		
9th St N to 4th St N	18,542	A
9th St N		
Gandy Blvd to Roosevelt Blvd	22,158	A

Source: 1998 Transportation Level of Service Report, Pinellas County MPO

Table 2.8
Existing (2000) AM and PM Peak Hour Level of Service
Intersections and Ramps

Location	AM LOS	PM LOS
Intersection		
Gandy Blvd @ US 19	F	F
Gandy Blvd @ Grand Ave (28th St)	D	F
Gandy Blvd @ I-275 NB Off Ramp	F	F
Gandy Blvd @ Frontage Rd	F	F
EB Gandy Blvd @ 9th St N	D	E
WB Gandy Blvd @ 9th St N	F	E
Gandy Blvd @ Roosevelt Blvd	C	D
Gandy Blvd @ 4th St N	F	F
Roosevelt Blvd @ 9th St N	F	E
Ramp		
EB Gandy to I-275 Diverge	C	B
EB Gandy to NB I-275 Merge	B	B
EB Gandy to SB I-275 Merge	C	C
NB I-275 to Gandy Diverge	F	F
SB I-275 to WB Gandy Diverge	B	B
SB I-275 to WB Gandy Merge	C	D
WB Gandy to SB I-275 Diverge	D	E
WB Gandy to SB I-275 Merge	D	E
EB Gandy to US 19 Diverge	C	B
US 19 to EB Gandy Merge	D	B
US 19 to WB Gandy Merge	A	B
WB Gandy to US 19 Diverge	C	E

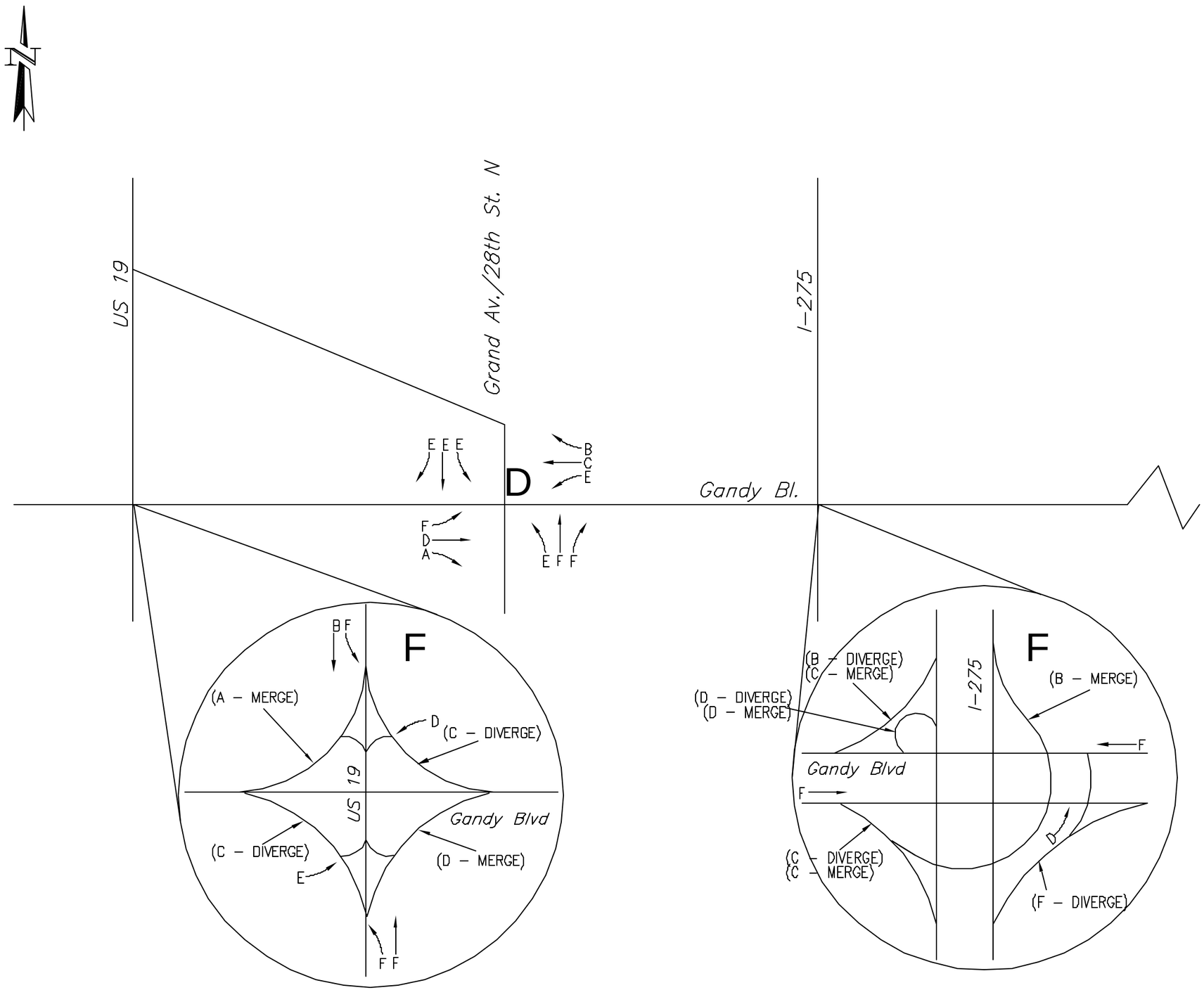

Florida Department of Transportation

SR 694 (Gandy Boulevard)

From US 19 to East of 4th Street
Pinellas County, Florida

Existing (2000) AM Peak Hour Level of Service

Plate A - Western Segment

LEGEND

F →	Turning Movement Level of Service
F	Overall Intersection Level of Service
(D – DIVERGE)	Ramp Merge/Diverge Level of Service

NOT TO SCALE

FPN#: 256931-1-32-01
DWG Date: January 12, 2001

Figure 2.7a

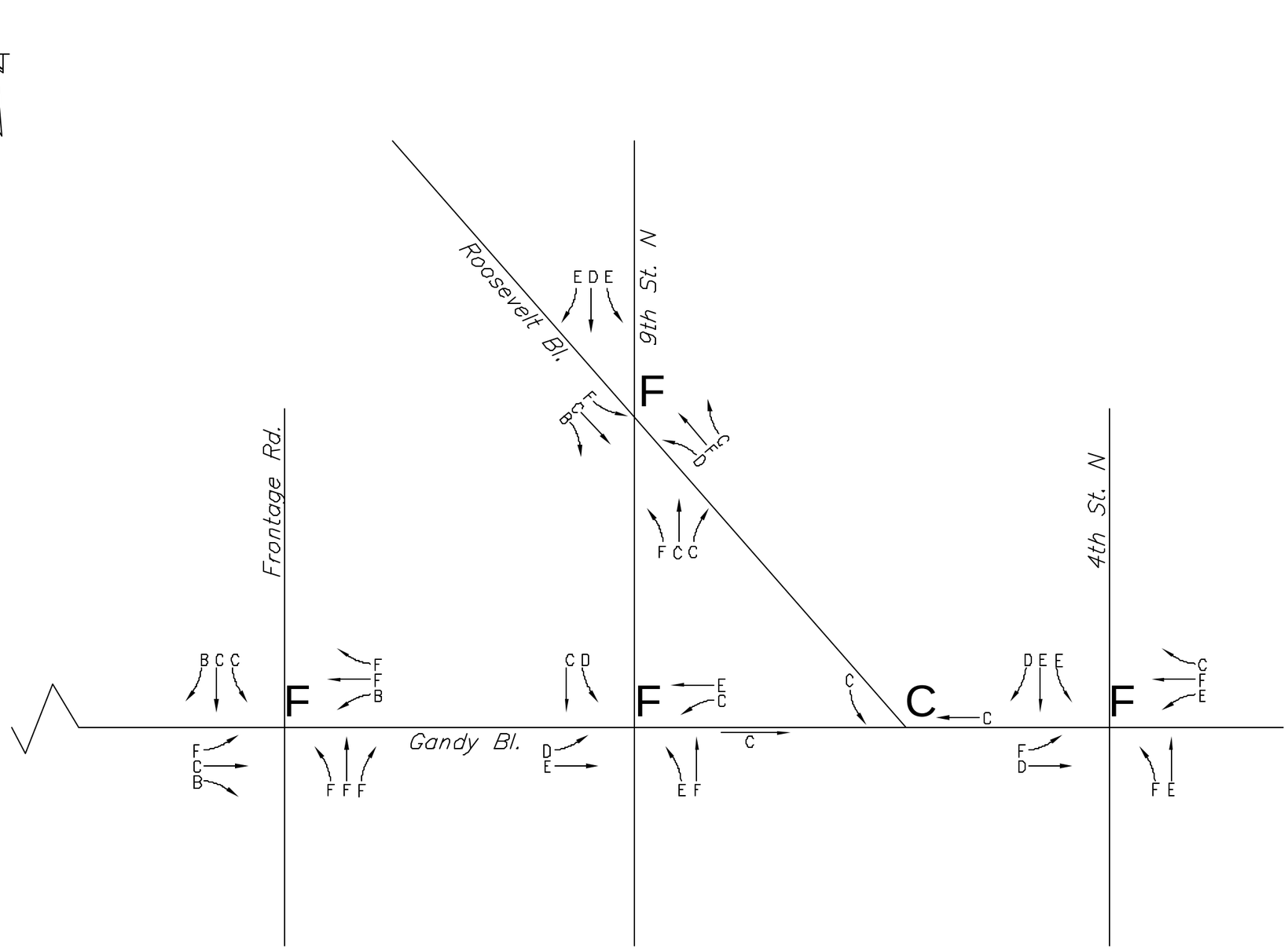

Florida Department of Transportation

SR 694 (Gandy Boulevard)

From US 19 to East of 4th Street
Pinellas County, Florida

Existing (2000) AM Peak Hour Level of Service

Plate B - Eastern Segment

LEGEND

E → Turning Movement Level of Service

F Overall Intersection Level of Service

Note: The intersection of Gandy Blvd and 9th St N. was analyzed as two separate intersections. The worst LOS is reported.

NOT TO SCALE

FPN#: 256931-1-32-01
DWG Date: January 12, 2001

Figure 2.7b

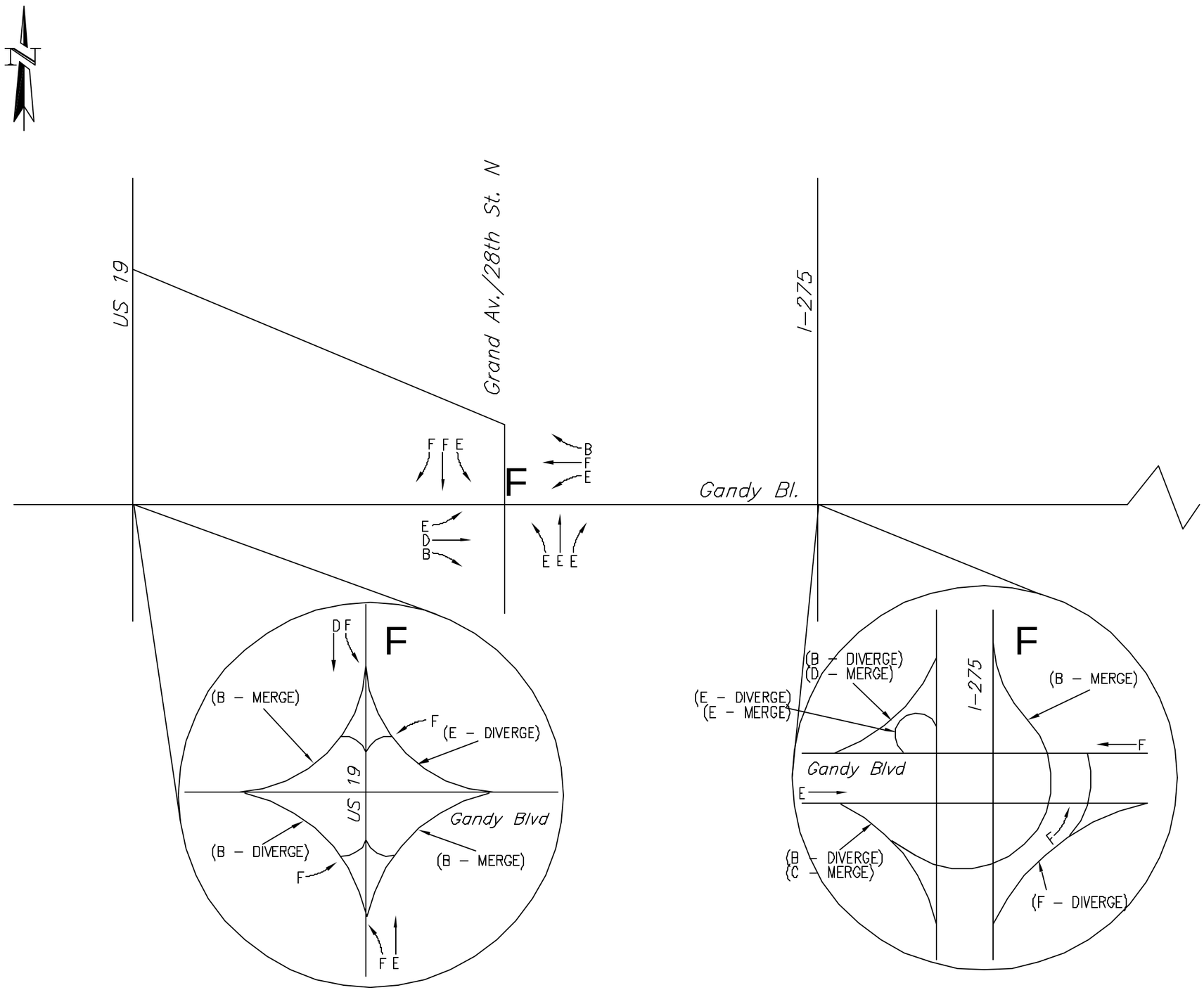

Florida Department of Transportation

SR 694 (Gandy Boulevard)

From US 19 to East of 4th Street
Pinellas County, Florida

Existing (2000) PM Peak Hour Level of Service

Plate A - Western Segment

LEGEND

E →	Turning Movement Level of Service
F	Overall Intersection Level of Service
(B – DIVERGE)	Ramp Merge/Diverge Level of Service

NOT TO SCALE

FPN#: 256931-1-32-01
DWG Date: January 12, 2001

Figure 2.8a

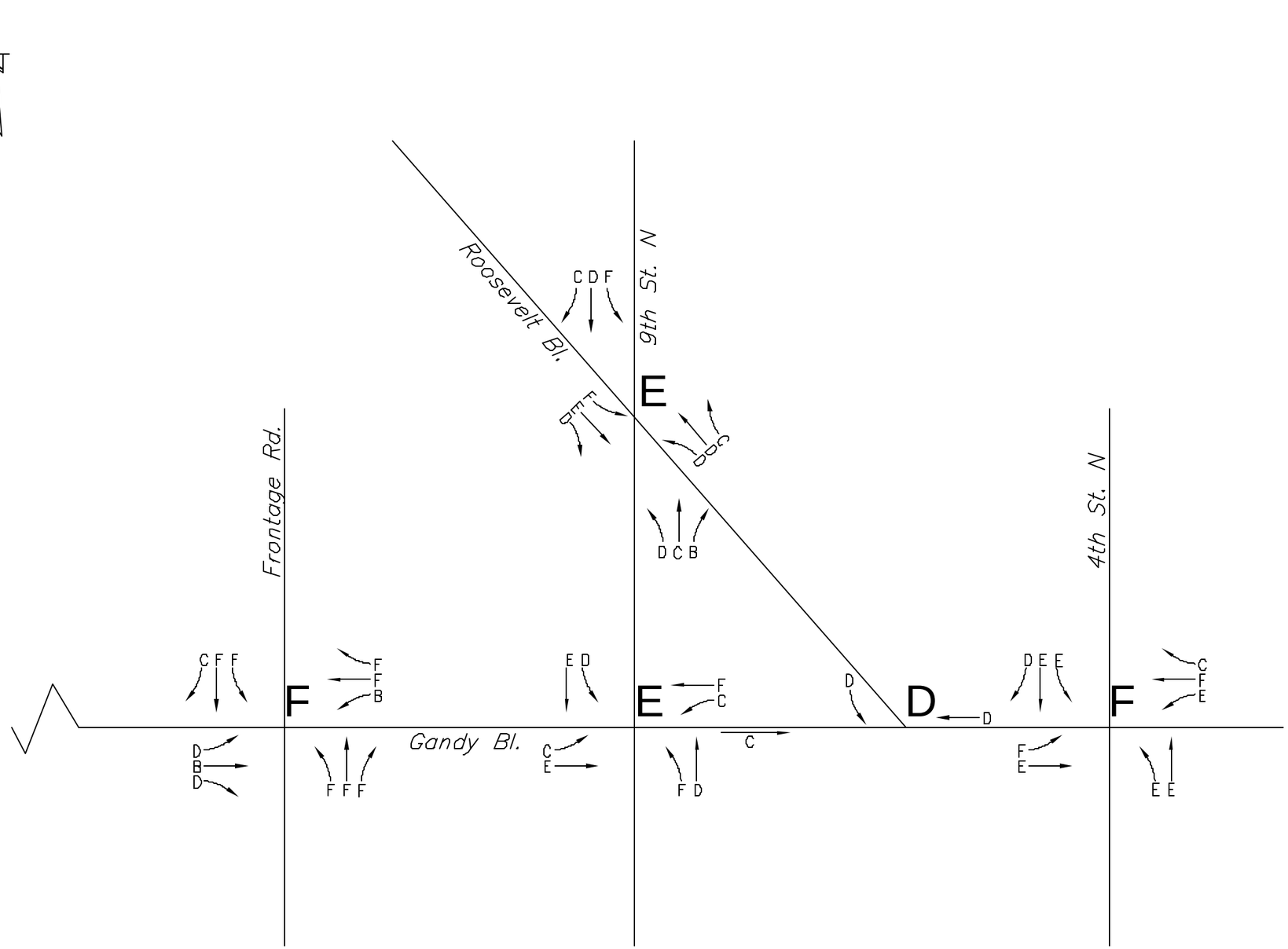

Florida Department of Transportation

SR 694 (Gandy Boulevard)

From US 19 to East of 4th Street
Pinellas County, Florida

Existing (2000) PM Peak Hour Level of Service

Plate B - Eastern Segment

LEGEND

E → Turning Movement Level of Service

F Overall Intersection Level of Service

Note: The intersection of Gandy Blvd and 9th St N. was analyzed as two separate intersections. The worst LOS is reported.

NOT TO SCALE

FPN#: 256931-1-32-01
DWG Date: January 12, 2001

Figure 2.8b

The full results of the intersections and ramps LOS analyses, located in **Appendix D**, gives further detail on which intersections and particular movements are experiencing exceptionally long delays. In the AM, intersections experiencing particularly long delays include Gandy Boulevard at US 19 (142.6 sec/veh), Gandy Boulevard at the Interstate 275 ramp (151.8 sec/veh), and Gandy Boulevard at Frontage Road (173.3 sec/veh). According to the Highway Capacity Manual any intersection with a delay longer than 80 sec/veh is operating at LOS F. These intersections are obviously well beyond the threshold for LOS F**.**

Within these intersections, there are particular movements that contribute most heavily to the overall intersection delay. At the intersection of Gandy Boulevard and US 19 it is the southbound left that is experiencing the longest delay at 276.8 sec/veh. At the Gandy Boulevard and Interstate 275 ramp signalized intersection the longest delays are for the eastbound and westbound through movements. At the intersection of Gandy Boulevard and Frontage Road the eastbound left and the entire northbound movement are experiencing tremendous delays at 539.6 sec/veh and 541.8 sec/veh respectively.

In the PM, the delay at the Gandy Boulevard and US 19 intersection is still long enough at 102.6 sec/veh to create a LOS of F. It is the northbound left (235.4 sec/veh) and eastbound left (406.0 sec/veh) that contribute most to the intersection delay. The intersection of Gandy Boulevard and Grand Avenue is another particularly congested intersection during the PM peak. The overall intersection delay is 171.4 sec/veh with the westbound through (248.2 sec/veh) and the southbound shared through/right (362.2 sec/veh) making up a large part of this delay. Two other intersections experiencing long delays in the PM include Gandy Boulevard at the Interstate 275 ramp (196.6 sec/veh) and Gandy Boulevard at Frontage Road (106.7 sec/veh). At the Interstate 275 ramp intersection, the longest delay is for the westbound through movement which experiences a delay per vehicle of 324.1 seconds. The longest delay at the intersection of Gandy Boulevard and Frontage Road is for the shared northbound left, through, and right movement which experiences a delay of over 500 sec/veh**.**

It should be noted that in some cases, the HCS analysis resulted in a LOS of F for movements where the volume was very low. Despite the low volumes, these movements still experience

long delays due to the large total cycle time. Although most or all of the vehicles that are at the intersection when the light turns green clear the intersection, any arriving after the light has turned red must wait a long time for the light to turn green again, since only a small portion of the total green time is dedicated to movements with low volumes.

Due to the interaction of limited access and arterial connections, the intersection of Gandy Boulevard and 9th Street North was analyzed as two separate intersections, eastbound Gandy Boulevard at 9th Street North and westbound Gandy Boulevard at 9th Street North. This led to a situation in which the northbound through and southbound through movements at this intersection had two separate LOS results. The same was true for the overall intersection LOS. For these movements and the intersection as a whole, the worst LOS was reported in all figures in this report.

2.3.2 Operational Analyses for Arterial Roadway Segments

After the analysis of signalized intersections was completed, the results were used to determine the LOS for roadway segments within the study corridor. Again, version 3.2 of HCS was used to perform this analysis. Each arterial segment along Gandy Boulevard was examined in both directions, as the LOS for a segment can vary depending on the direction analyzed. Gandy Boulevard currently operates at LOS E in both the eastbound and westbound directions during the AM peak hour. During the PM peak hour, the LOS is F for westbound Gandy Boulevard and D for the eastbound direction. Thus, only in the PM eastbound direction does this roadway currently meet the acceptable LOS D established by Pinellas County. A summary of the results of the existing LOS analysis for roadway segments is displayed in **Table 2.9.** The full results can be found in Appendix D.

These results are worse than the LOS reported for Gandy Boulevard by Pinellas County in 1997 in Table 2.7. However, comparison of the AADTs listed in Table 2.7 with the AADTs used in this study indicates that traffic in the corridor has grown considerably. Thus, this result is not unexpected.

Table 2.9
Existing (2000) AM and PM Peak Hour Level of Service
Roadway Segments

Segment	AM LOS	PM LOS
WB Gandy Blvd		
4th St N to Roosevelt Blvd	F	F
Roosevelt Blvd to 9th St N	E	F
9th St N to Frontage Rd	F	F
Frontage Rd to I-275	F	F
I-275 to Grand Ave (28th St)	B	F
Overall Arterial LOS	**E**	**F**
EB Gandy Blvd		
US 19 to Grand Ave (28th St)	D	D
Grand Ave to I-275	F	D
I-275 to Frontage Rd	B	B
Frontage Rd to 9th St N	D	E
9th St N to Roosevelt Blvd	C	C
Roosevelt Blvd to 4th St N	F	F
Overall Arterial LOS	**E**	**D**

It should be noted that the segment of Gandy Boulevard from US 19 to Grand Avenue was analyzed in the eastbound direction but not in the westbound direction. In order to analyze the Gandy Boulevard roadway segments HCS uses signalized intersection analysis results to compute the roadway segment LOS. In the eastbound direction, the segment of Gandy Boulevard from US 19 to Grand Avenue is analyzed using the Gandy Boulevard at Grand Avenue signalized intersection analysis results as an input. To analyze this segment in the westbound direction, a signalized intersection at Gandy Boulevard and US 19 would have to exist. Since this is a grade separated intersection, and the only signal that does exist is on US 19 rather than on Gandy Boulevard, such an analysis could not be performed in the westbound direction.

SECTION 3
FUTURE CONDITIONS

This section includes an analysis of future traffic conditions within the Gandy Boulevard study corridor. This required the development of future traffic projections for the corridor. This information was used to evaluate future operating conditions for intersections, ramps, and roadway segments within the study area.

3.1 Planned Improvements

The first step in the evaluation of future conditions was to create a list of planned roadway improvements. The Pinellas MPO 2020 Long Range Transportation Plan (LRTP) was reviewed to determine the planned roadway improvements anticipated in the vicinity of the Gandy Boulevard study corridor. These improvements are discussed below.

3.1.1 Highway

Planned Improvements are scheduled by the FDOT, Pinellas County, and the City of St. Petersburg by the 2020 horizon. The next three sections divide the improvements by funding authority. Under each authority the projects are broken down by whether they are funded by the 2010 Cost Feasible Interim Plan or the 2020 Cost Feasible LRTP. All projects are funded.

3.1.1.1 State Funded Improvements

FDOT will be improving Interstate 275 and adding a connector, as listed in the 2010 Interim Plan. With the addition of two lanes, Interstate 275 will be eight lanes wide from Gandy Boulevard to Big Island Gap. A connector, CR 296, will be built from west of 32nd Street to Interstate 275/ Roosevelt Boulevard. This will be a six-lane partially controlled access road.

The 2020 LRTP includes improvements to US Highway 19, Gandy Boulevard, Ulmerton Road, and Roosevelt Boulevard. Gandy Boulevard will be upgraded to partially controlled access facility between east of 4th Street to west of 9th Street. Two lanes will be added to Ulmerton Road between east of 119th Street to West Roosevelt Boulevard. Roosevelt Boulevard will

become a divided facility in two locations, from Ulmerton Road to 28th Street North and from Interstate 275 to 4th Street North.

3.1.1.2 Pinellas County Funded Projects

The LRTP 2010 interim plan includes improvements for Ulmerton Road. From 119th Street to West Roosevelt Boulevard, it will be upgraded to six-lane divided facility by Pinellas County.

The County will improve 54th Avenue North and 28th Street North as part of the 2020 LRTP. The County will make 54th Avenue North a divided facility from 16th Street North to 49th Street North and will add two lanes to some roadway segments. Two lanes will be added to 28th Street North from 38th Avenue North to 62nd Avenue North, making this a 4-lane divided road.

3.1.1.3 City of St. Petersburg Funded Projects

Gandy Boulevard, as part of the 2010 Interim LRTP, will have two lanes added to it from 9th Street North to 28th Street North. The Ulmerton Road/ Interstate 275 Interchange will have a one-way lane added from eastbound Ulmerton Road to the southbound Interstate 275 exit ramp. These improvements will be in addition to the currently programmed improvements:

- Relocate the Frontage Road/Gandy Boulevard intersection to 16th Street North.
- Widen Gandy Boulevard from 34th Street to Interstate 275

3.1.2 Transit

Currently, there are no committed major transit improvements for the study corridor in the 2020 LRTP. There may be some changes in bus service, particularly in the vicinity of the Parkside Mall, however these have not been formally documented as of the date of this report. The ongoing Pinellas Mobility Major Investment Study will identify the major transit improvements that are necessary and fundable for Pinellas County.

3.2 Traffic Projections

3.2.1 Opening Year (2005)

For the opening year (2005), traffic projections were developed for two different scenarios and will be used for subsequent air and noise studies. These scenarios were a No-Build Alternative and a Build Alternative. The No-Build Alternative represents the existing corridor configuration plus committed projects for the next five years. Thus, this alternative demonstrates how the study corridor will be configured if no improvements, other than those already committed, are made. The Build Alternative assumes that the eastern portion of the study corridor will be grade separated, which will result in a slight redistribution of traffic at the intersections of Gandy Boulevard at Frontage Road and Gandy Boulevard at 9th Street North. The portion of the corridor west of Interstate 275 was assumed to be widened to six lanes.

In order to develop the AADT projections for the No-Build and Build Alternatives, the existing (2000) AADTs and the design year (2025) projected AADTs were examined. For each leg of each intersection, a compound growth rate for the 2000 to 2025 time period was calculated. Using the existing (2000) AADTs as a starting point, this growth rate was then applied for five years to estimate the opening year (2005) AADTs for the No-Build and Build Alternatives.

Next, using the year 2000 estimated K_{30} and $D_{30,}$ preliminary year 2005 AM and PM peak-hour approaches were estimated for all intersections. Where there are no access points between intersections, approach/departure volumes from one intersection were reconciled (smoothed) with the next intersection. Because the observed traffic volumes on Gandy Boulevard were the highest near the Interstate 275 interchange, this was the control point against which other intersection approach volumes were calculated. The calculations and results of the turning movement analysis for the No-Build Alternative and Build Alternative are presented in Appendix B. The estimated AADTs for the No-Build Alternative are depicted in **Figure 3.1**. The AM and PM estimated peak hour volumes for the opening year (2005) No-Build Alternative are shown in **Figure 3.2** and **Figure 3.3** respectively. The estimated AADTs for the Build Alternative are depicted in **Figure 3.4**. The AM and PM estimated peak hour volumes for the opening year (2005) Build Alternative are shown in **Figure 3.5** and **Figure 3.6**.

Florida Department of Transportation

SR 694 (Gandy Boulevard)

From US 19 to East of 4th Street
Pinellas County, Florida

Opening Year (2005) Annual Average Daily Traffic Volumes* (No-Build Alternative)

Plate A - Western Segment

LEGEND

49,600 Two-Way AADT Volume

* AADT volumes are rounded to nearest hundred

NOT TO SCALE

FPN#: 256931-1-32-01
DWG Date: February 12, 2002

Figure 3.1a

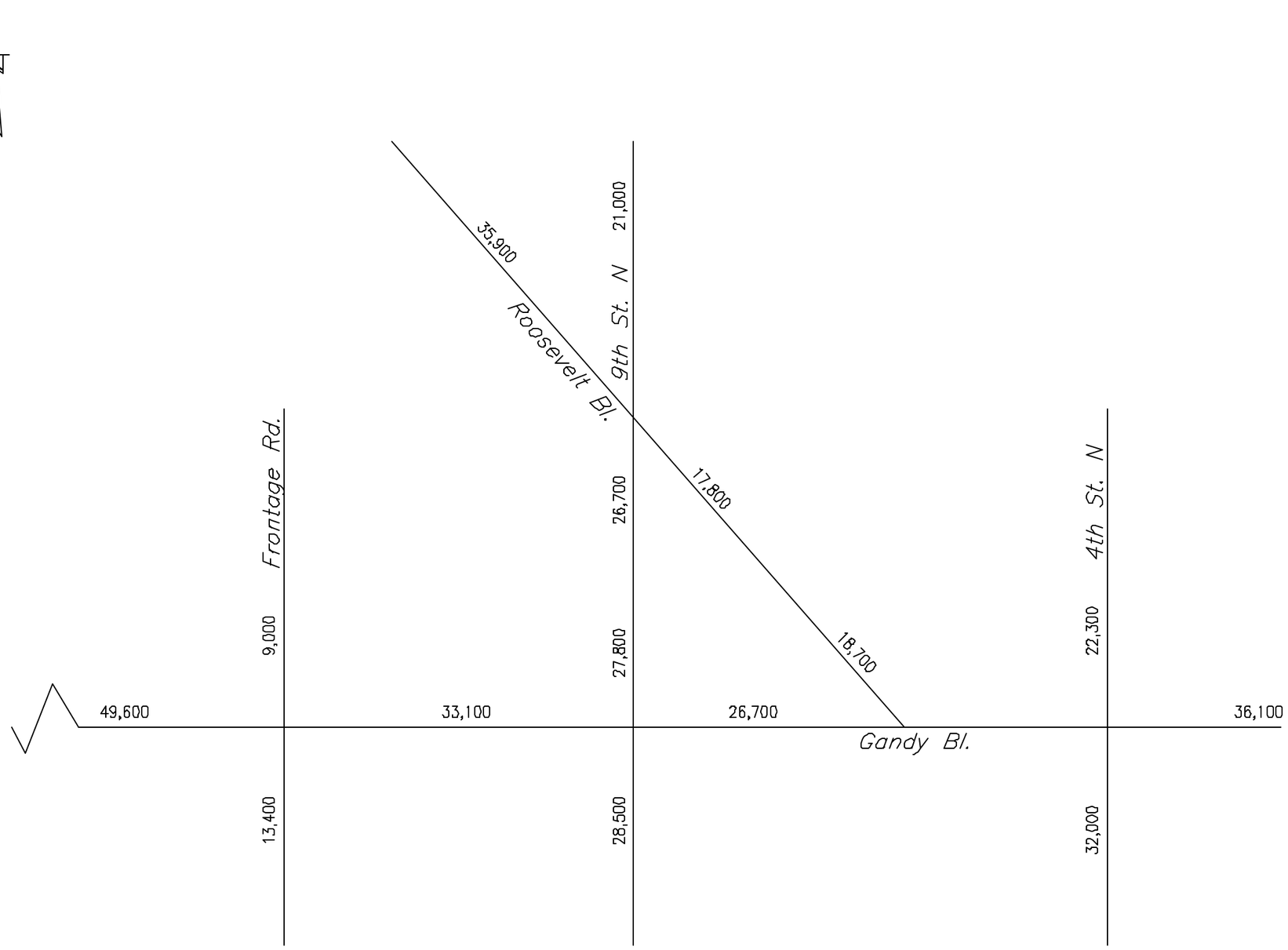

Florida Department of Transportation

SR 694 (Gandy Boulevard)

From US 19 to East of 4th Street
Pinellas County, Florida

Opening Year (2005) Annual Average Daily Traffic Volumes* (No-Build Alternative)

Plate B - Eastern Segment

LEGEND

36,100 Two-Way AADT Volume

* AADT volumes are rounded to nearest hundred

NOT TO SCALE

FPN#: 256931-1-32-01
DWG Date: February 12, 2002

Figure 3.1b

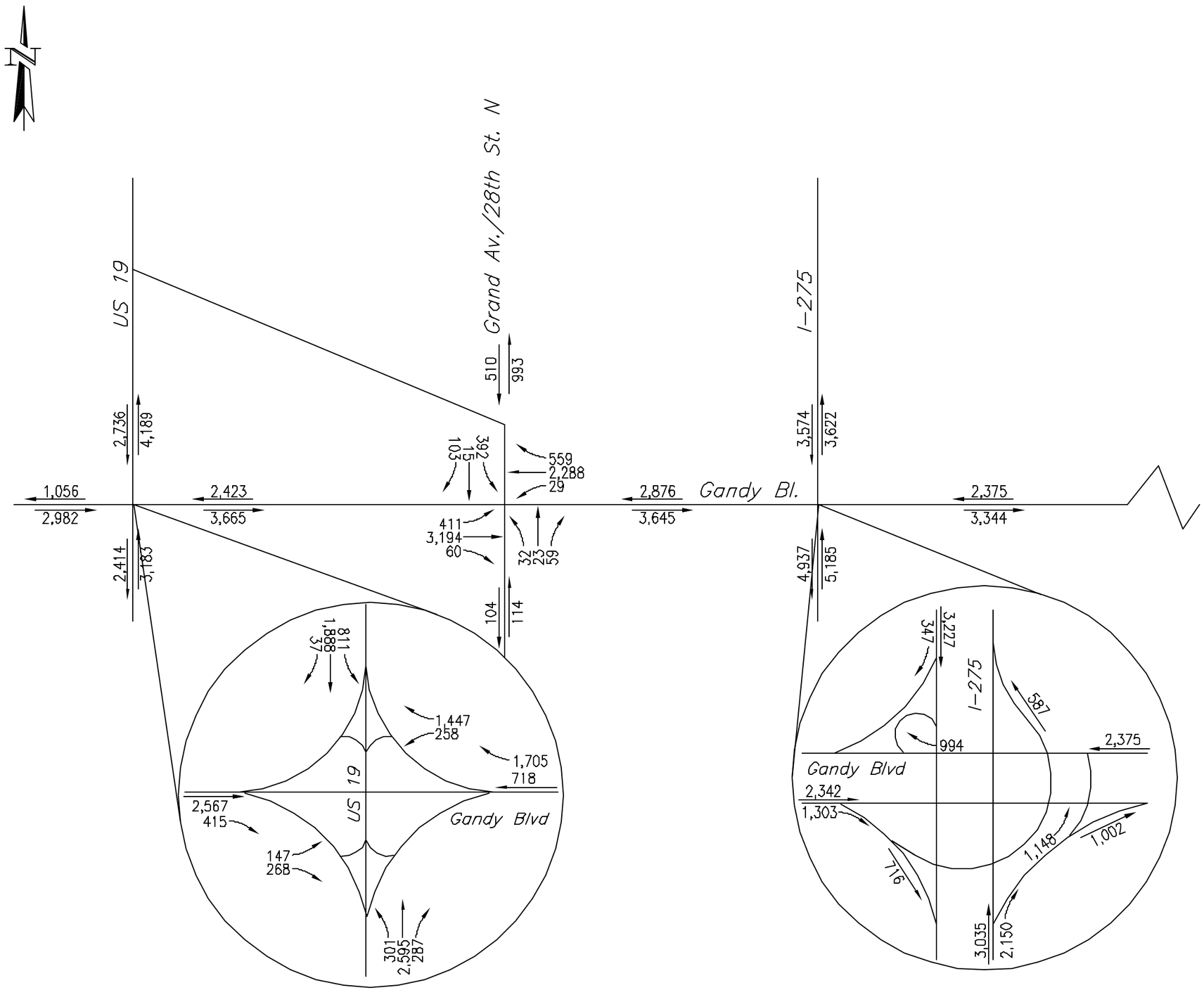

Florida Department of Transportation

SR 694 (Gandy Boulevard)

From US 19 to East of 4th Street
Pinellas County, Florida

Opening Year (2005) AM Peak Hour Volumes (No-Build Alternative)

Plate A - Western Segment

NOT TO SCALE

FPN#: 256931-1-32-01
DWG Date: February 12, 2002

Figure 3.2a

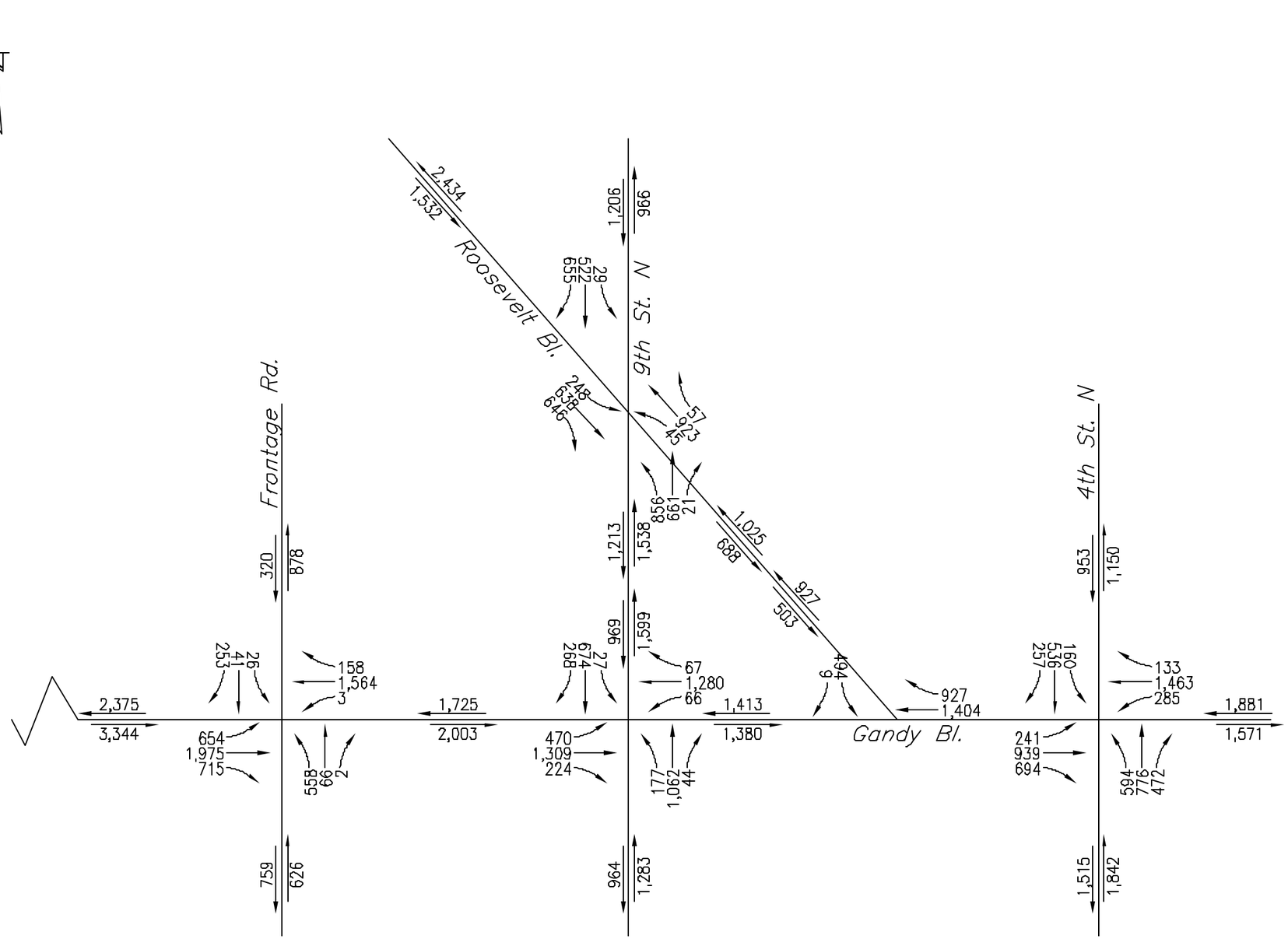

Florida Department of Transportation

SR 694 (Gandy Boulevard)

From US 19 to East of 4th Street
Pinellas County, Florida

Opening Year (2005) AM Peak Hour Volumes (No-Build Alternative)

Plate B - Eastern Segment

NOT TO SCALE

FPN#: 256931-1-32-01
DWG Date: February 12, 2002

Figure 3.2b

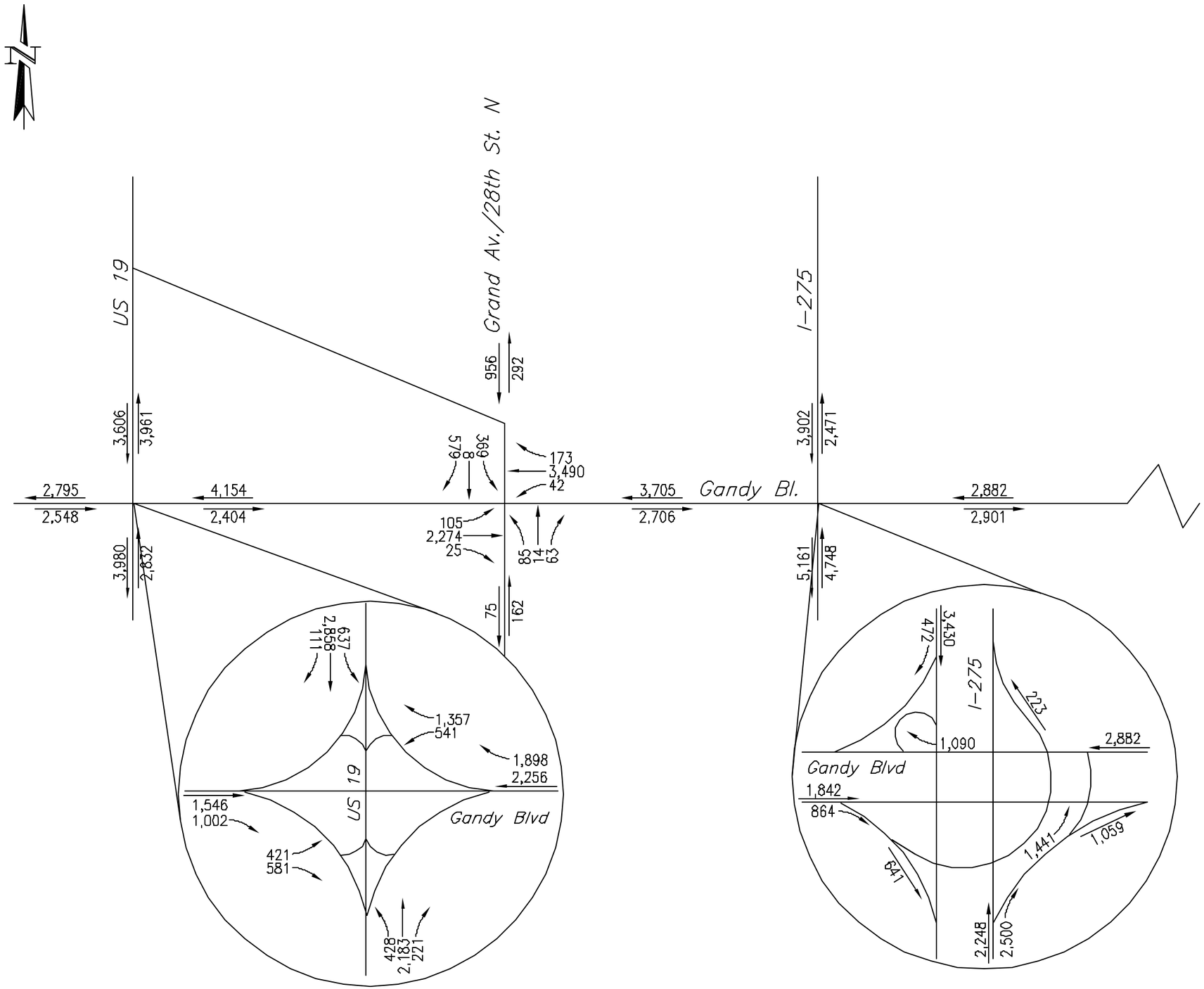

Florida Department of Transportation

SR 694 (Gandy Boulevard)

From US 19 to East of 4th Street
Pinellas County, Florida

Opening Year (2005) PM Peak Hour Volumes (No-Build Alternative)

Plate A - Western Segment

NOT TO SCALE

FPN#: 256931-1-32-01
DWG Date: January 12, 2001

Figure 3.3a

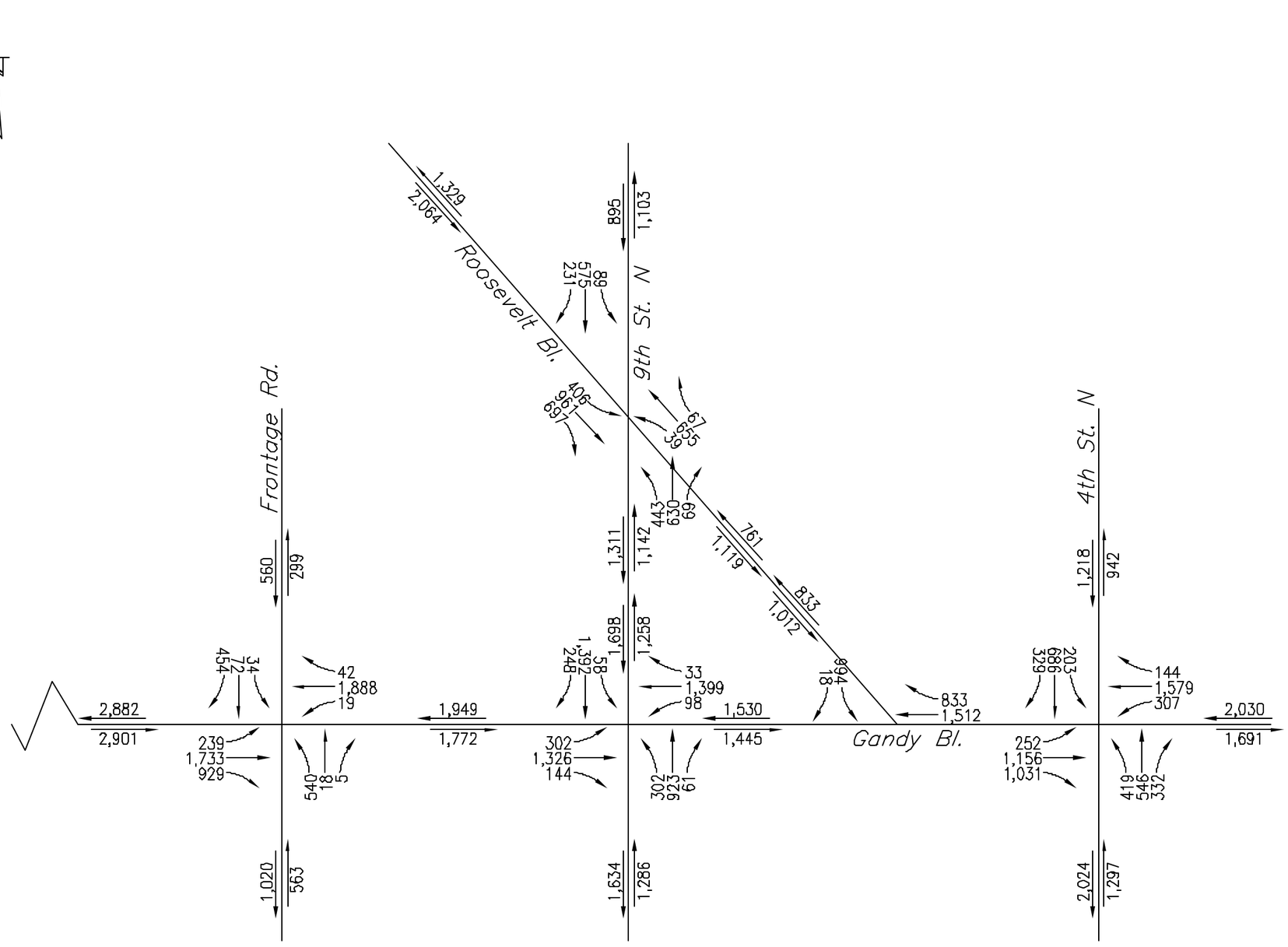

Florida Department of Transportation

SR 694 (Gandy Boulevard)

From US 19 to East of 4th Street
Pinellas County, Florida

Opening Year (2005) PM Peak Hour Volumes (No-Build Alternative)

Plate B - Eastern Segment

NOT TO SCALE

FPN#: 256931-1-32-01
DWG Date: February 12, 2002

Figure 3.3b

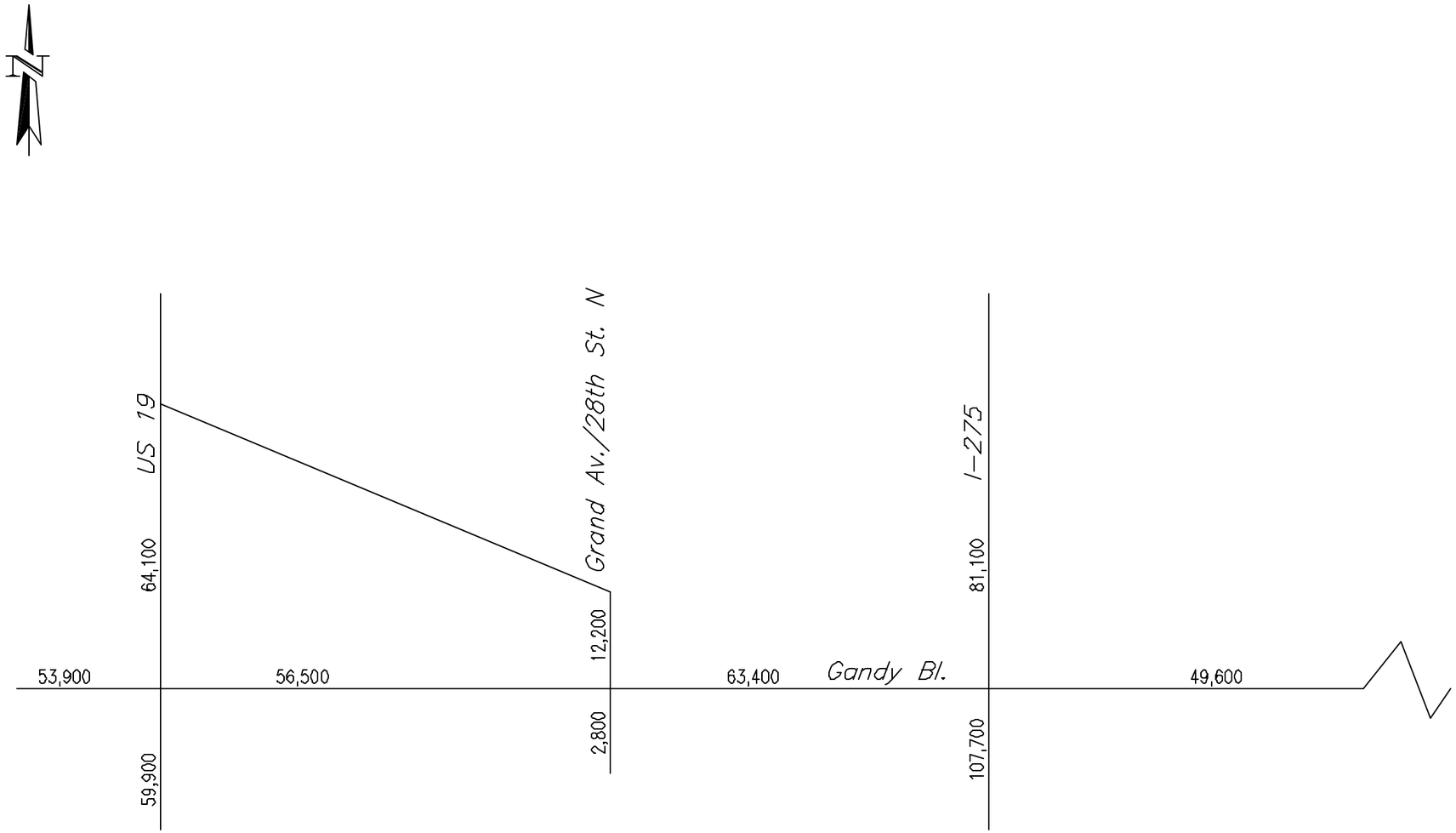

Florida Department of Transportation

SR 694 (Gandy Boulevard)

From US 19 to East of 4th Street
Pinellas County, Florida

Opening Year (2005) Annual Average Daily Traffic Volumes* (Build Alternative)

Plate A - Western Segment

LEGEND

63,400 Two-Way AADT Volume

* AADT volumes are rounded to nearest hundred

NOT TO SCALE

FPN#: 256931-1-32-01
DWG Date: February 12, 2002

Figure 3.4a

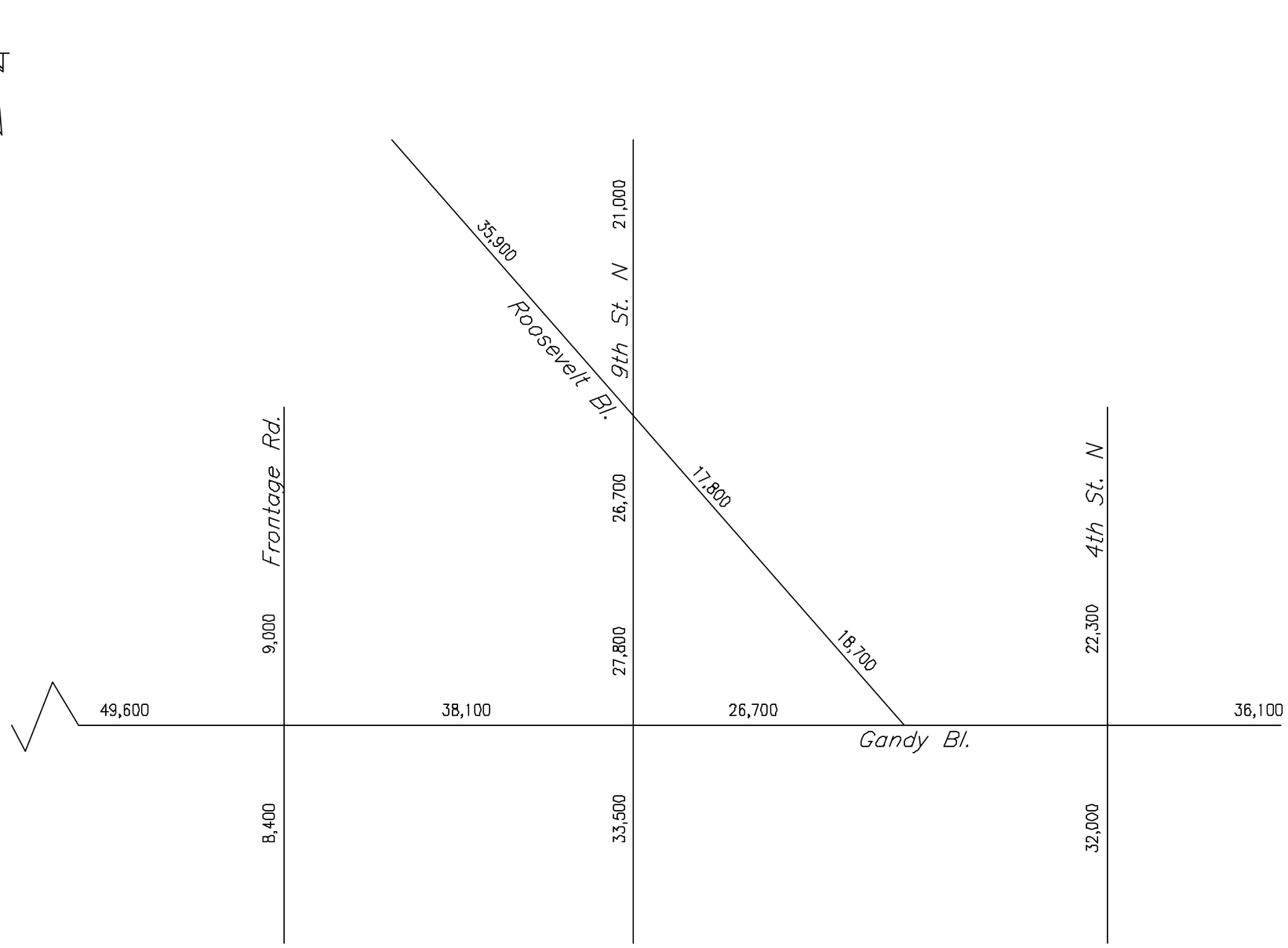

Florida Department of Transportation

SR 694 (Gandy Boulevard)

From US 19 to East of 4th Street
Pinellas County, Florida

Opening Year (2005) Annual Average Daily Traffic Volumes* (Build Alternative)

Plate B - Eastern Segment

LEGEND

36,100 Two-Way AADT Volume

* AADT volumes are rounded to nearest hundred

NOT TO SCALE

FPN#: 256931-1-32-01
DWG Date: February 12, 2002

Figure 3.4b

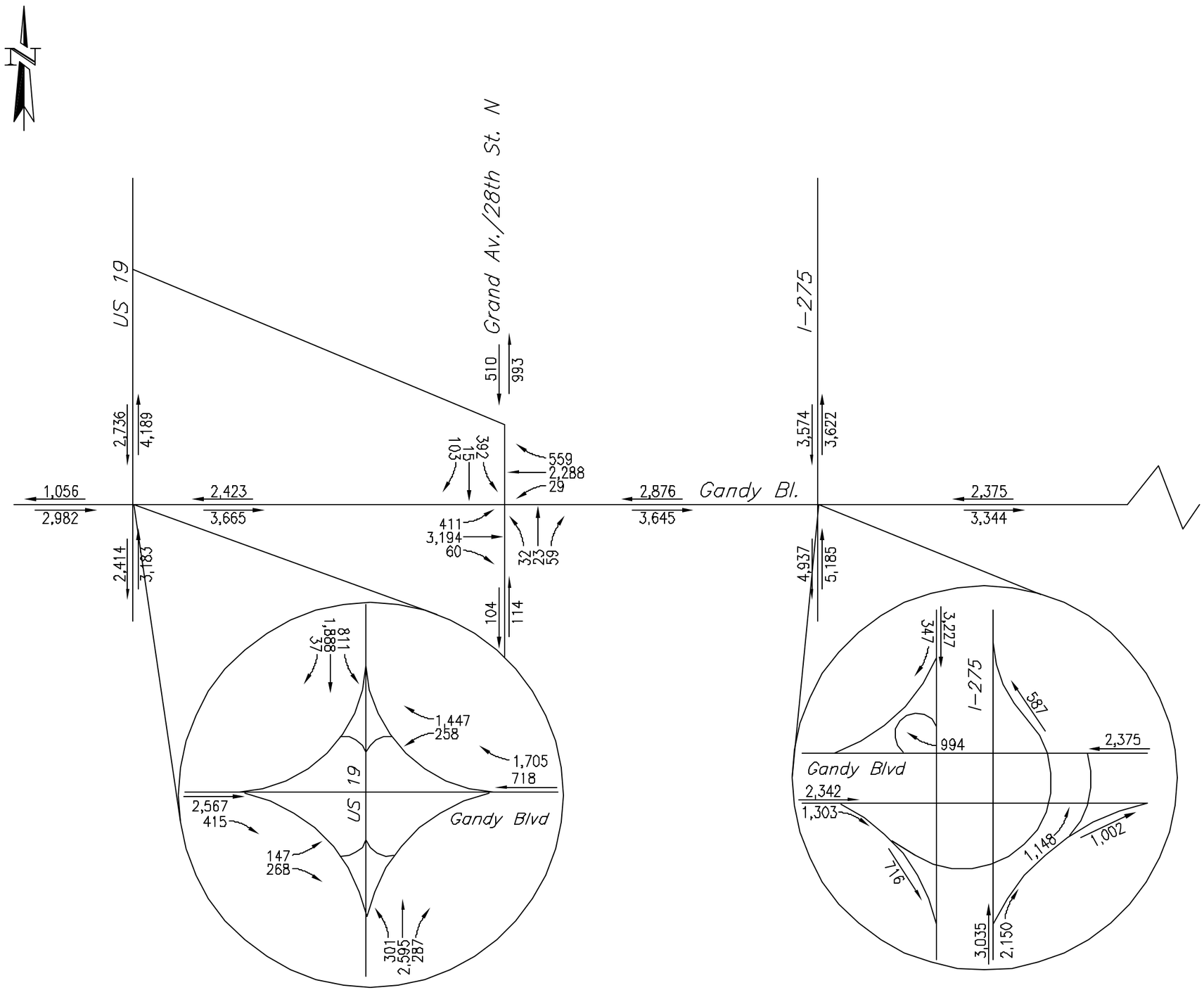

Florida Department of Transportation

SR 694 (Gandy Boulevard)

From US 19 to East of 4th Street
Pinellas County, Florida

Opening Year (2005) AM Peak Hour Volumes (Build Alternative)

Plate A - Western Segment

NOT TO SCALE

FPN#: 256931-1-32-01
DWG Date: January 12, 2001

Figure 3.5a

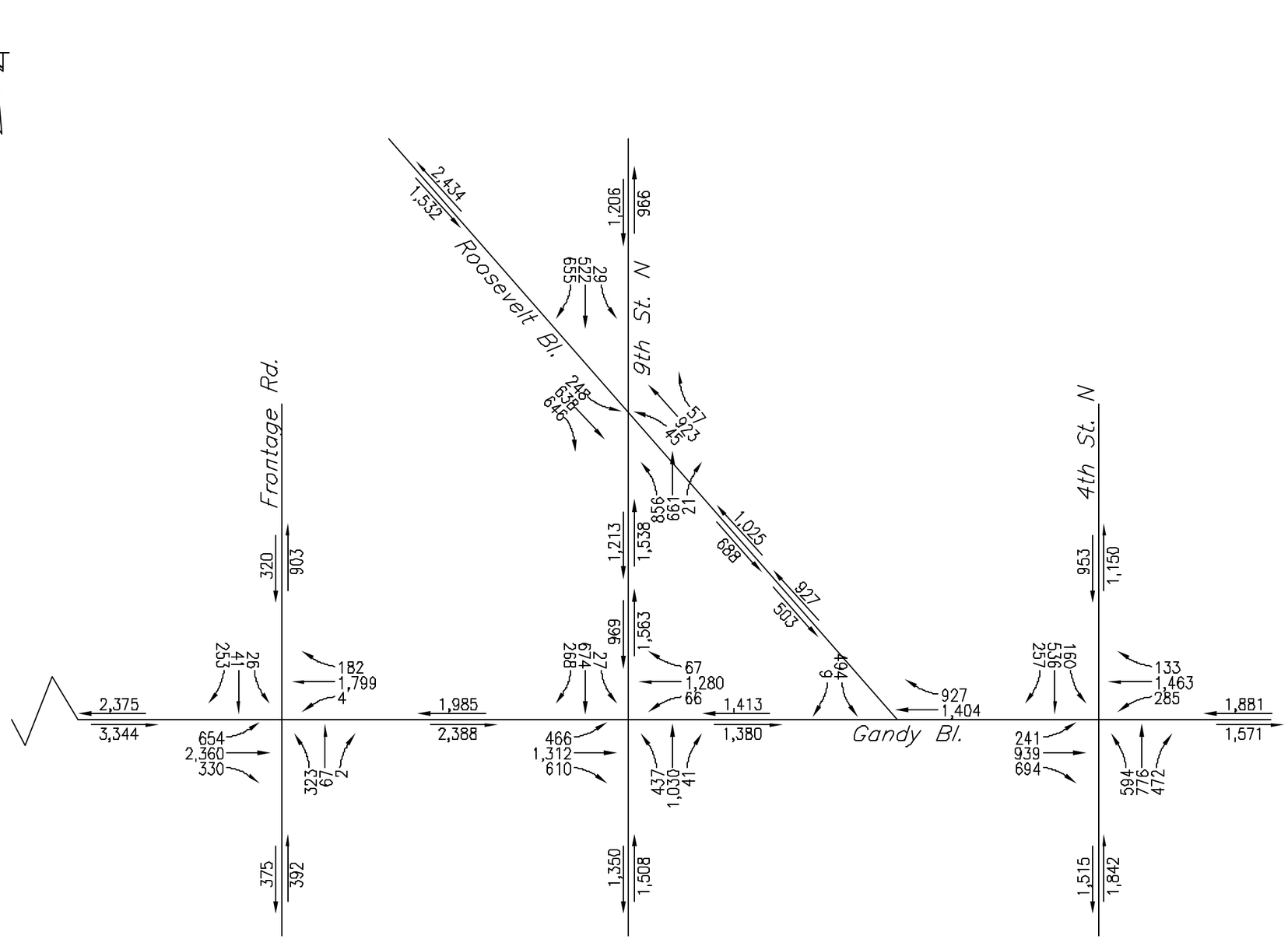

Florida Department of Transportation

SR 694 (Gandy Boulevard)

From US 19 to East of 4th Street
Pinellas County, Florida

Opening Year (2005) AM Peak Hour Volumes (Build Alternative)

Plate B - Eastern Segment

NOT TO SCALE

FPN#: 256931-1-32-01
DWG Date: February 12, 2002

Figure 3.5b

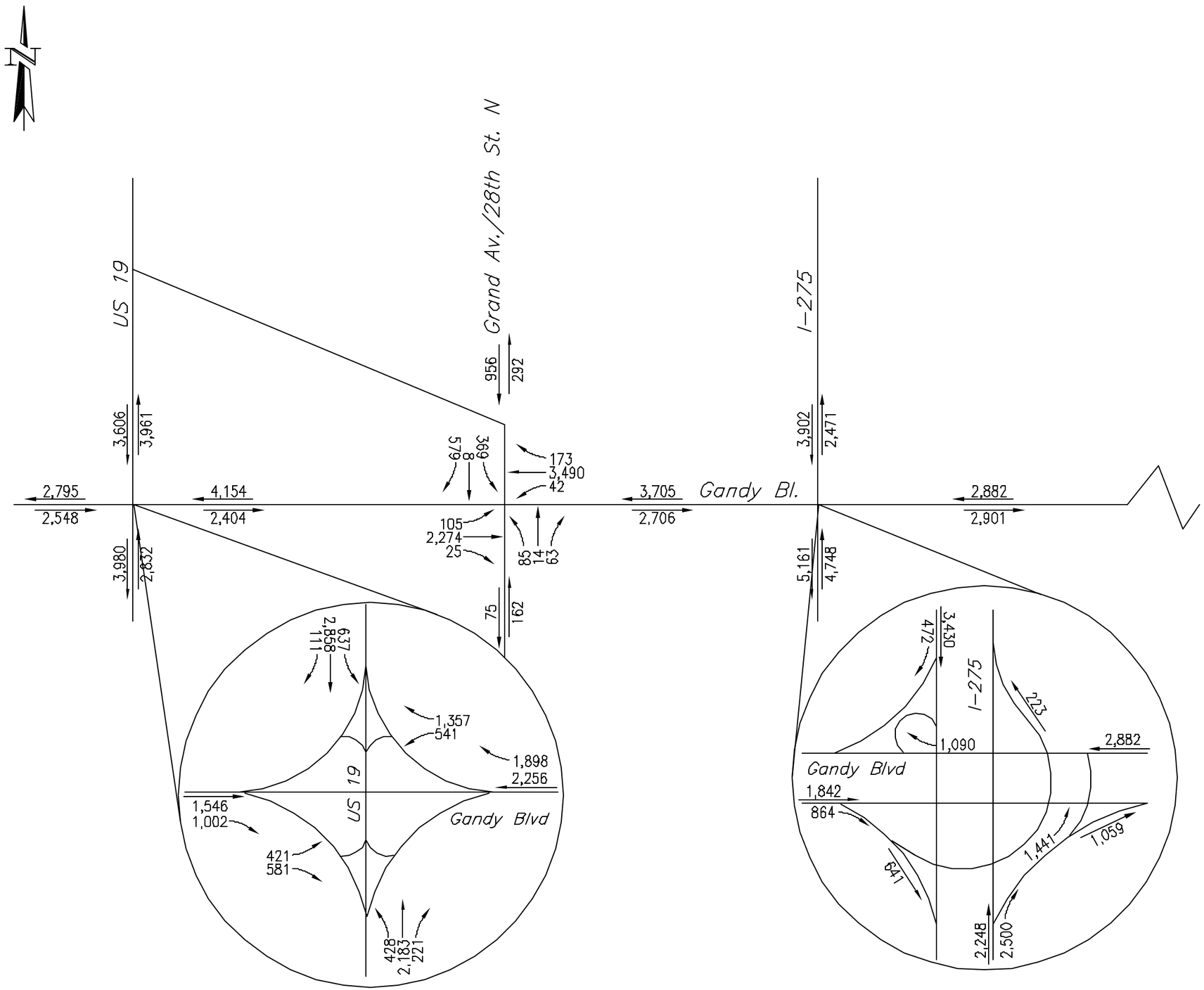

Florida Department of Transportation

SR 694 (Gandy Boulevard)

From US 19 to East of 4th Street
Pinellas County, Florida

Opening Year (2005) PM Peak Hour Volumes (Build Alternative)

Plate A - Western Segment

NOT TO SCALE

FPN#: 256931-1-32-01
DWG Date: January 12, 2001

Figure 3.6a

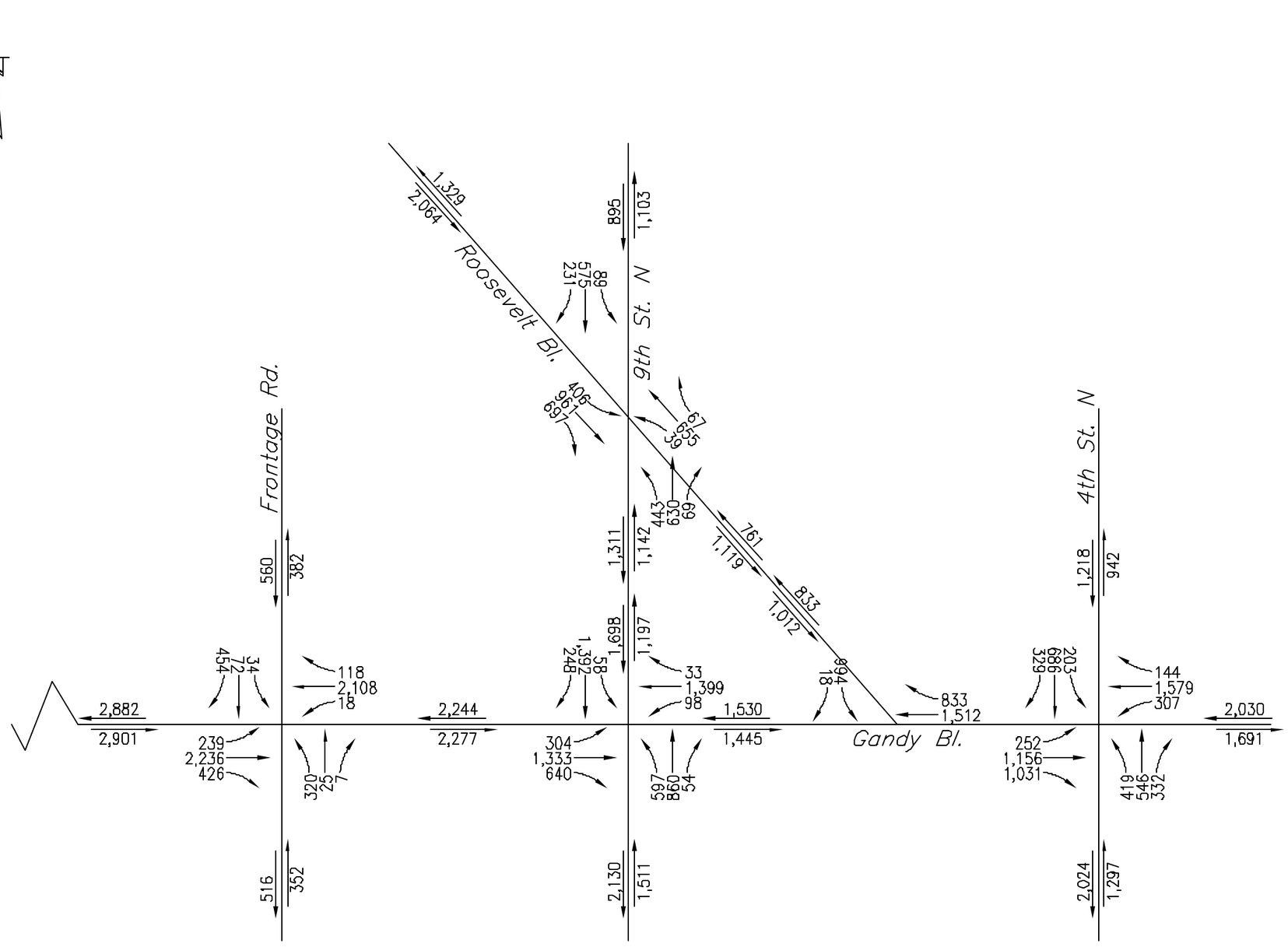

Florida Department of Transportation

SR 694 (Gandy Boulevard)

From US 19 to East of 4th Street
Pinellas County, Florida

Opening Year (2005) PM Peak Hour Volumes (Build Alternative)

Plate B - Eastern Segment

NOT TO SCALE

FPN#: 256931-1-32-01
DWG Date: February 12, 2002

Figure 3.6b

3.2.2 Design Year (2025)

Year 2025 traffic volumes were estimated using the Tampa Bay Regional Planning Model Version 3.2. To establish a baseline against which to compare various alternative improvement scenarios for the Gandy Boulevard corridor, the LRTP improvements for Gandy Boulevard in the study area, along with the improvements on Roosevelt Boulevard (east of Interstate 275) were removed from the 2020 LRTP (20A) network and volumes were reassigned. These volumes form the foundation of design-year (2025) traffic estimates.

To refine the model projections, a comparison of the validation results with observed volumes was undertaken. This is described in more detail in **Appendix E**. Where the 1995 model volumes were not within 10% of observed counts, the ratio of 1995 count/1995 volume was applied to 2020 projections to correct for over/under assignment. After applying the model output conversion factor, the 2020 AADT was then inflated by 1% per year to account for traffic in the year 2025. Projected volumes were then compared with year 2000 volumes to affirm that growth/decline in traffic was consistent with expectations for the area.

For the design year (2025), traffic projections were again developed for the No-Build Alternative and the Build Alternative. The process used to develop each set of projections is described below.

3.2.2.1 No-Build Alternative

After refining the 20A network model to exclude proposed Gandy Boulevard/Roosevelt Boulevard improvements, model AADTs were adjusted to represent year 2025 conditions. Using the year 2000 estimated K_{30} and D_{30}, preliminary year 2025 AM and PM peak-hour approaches were estimated for all intersections. Where there are no access points between intersections, approach/departure volumes from one intersection were reconciled (smoothed) with the next intersection. Because the observed traffic volumes on Gandy Boulevard were the highest near the Interstate 275 interchange, this was the control point against which other intersection approach volumes were calculated. The calculations and results of the turning movement analysis for the No-Build Alternative are presented in Appendix B**.** The estimated AADTs for the No-Build Alternative are depicted in **Figure 3.7**. The AM and PM estimated

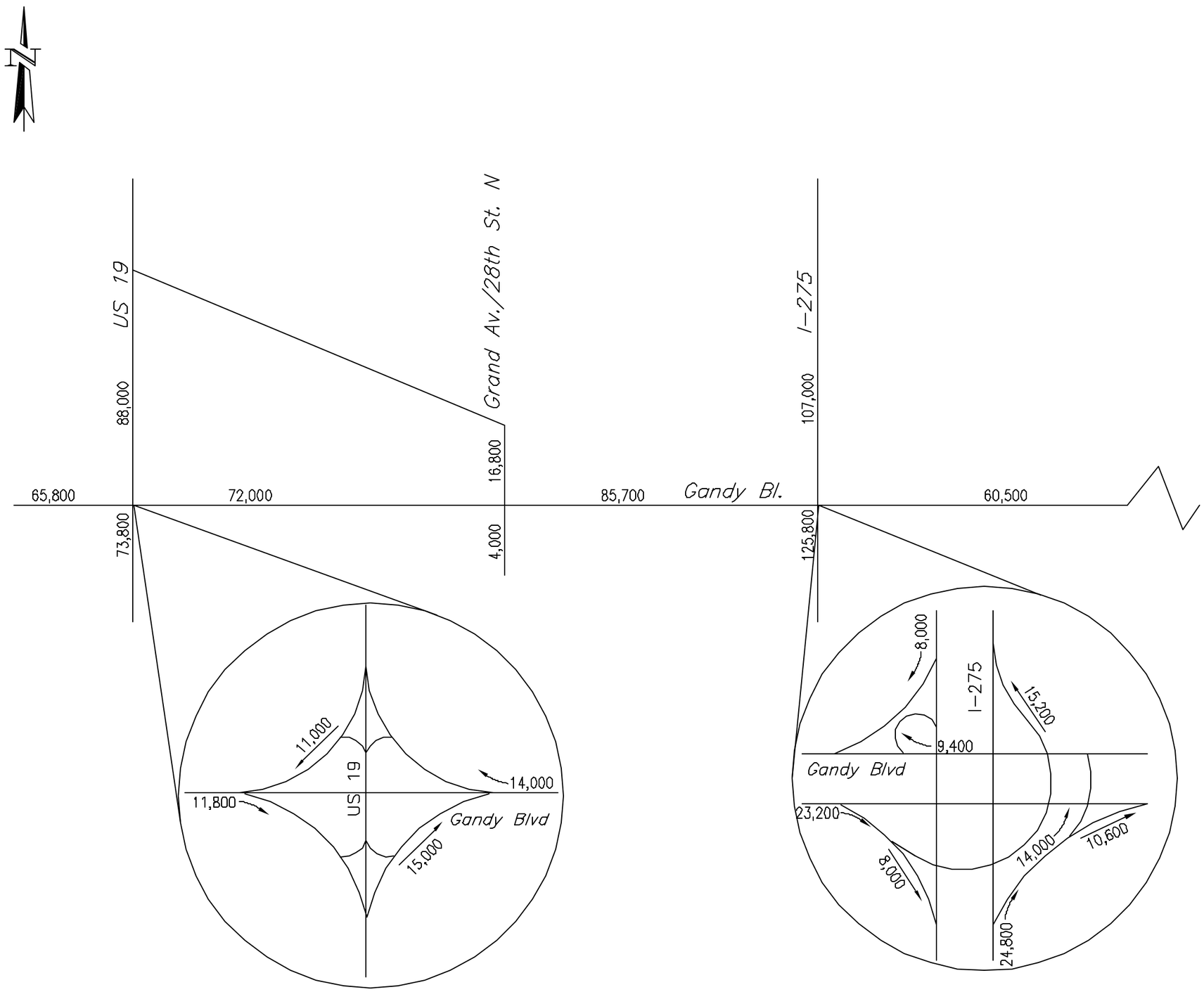

Florida Department of Transportation

SR 694 (Gandy Boulevard)

From US 19 to East of 4th Street
Pinellas County, Florida

Design Year (2025) Annual Average Daily Traffic Volumes* (No-Build Alternative)

Plate A - Western Segment

LEGEND

8,000 →	Directional AADT Volume
60,500	Two-Way AADT Volume

* Volumes are rounded to the nearest hundred

NOT TO SCALE

FPN#: 256931-1-32-01
DWG Date: February 12, 2002

Figure 3.7a

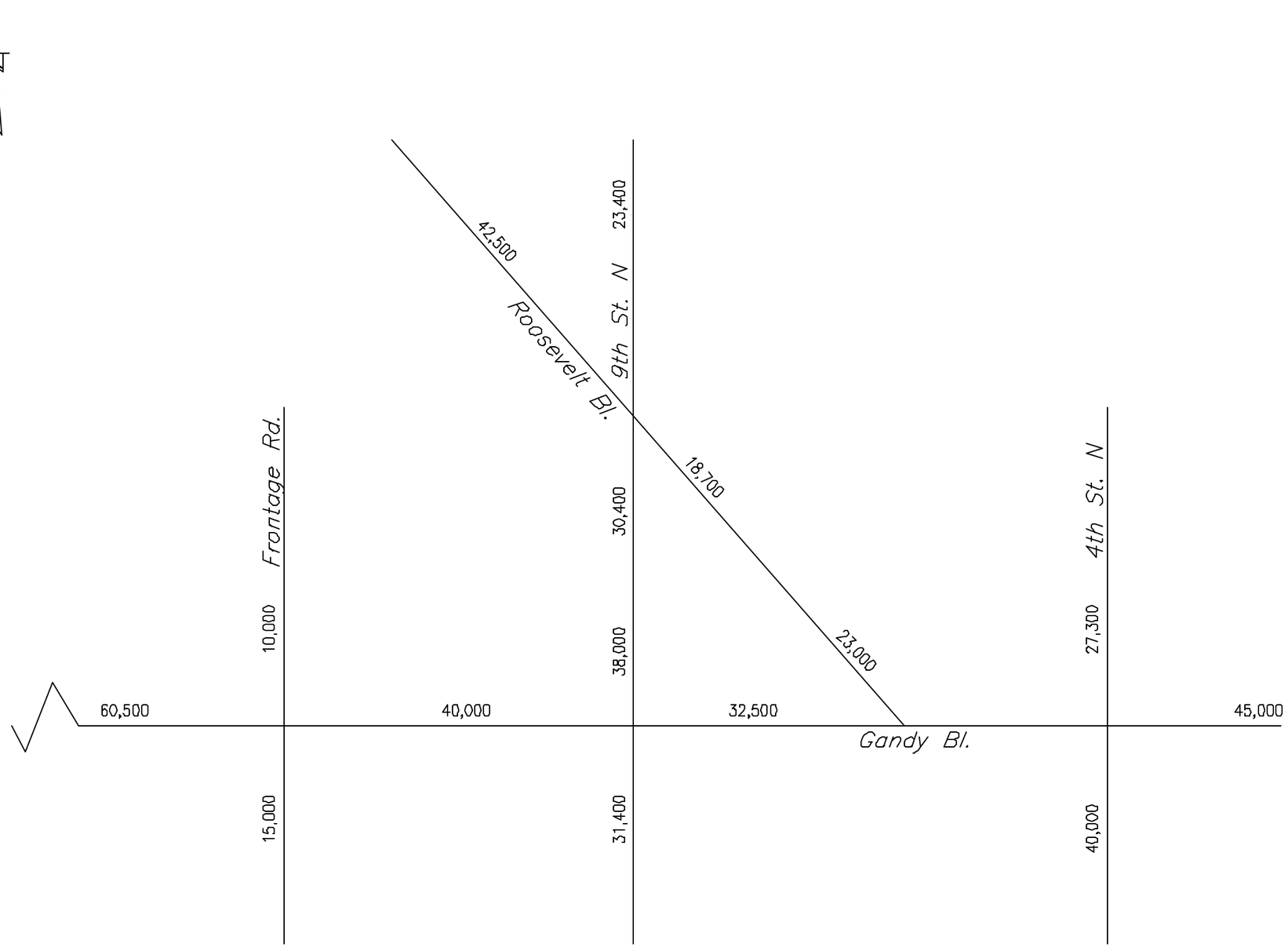

Florida Department of Transportation

SR 694 (Gandy Boulevard)

From US 19 to East of 4th Street
Pinellas County, Florida

Design Year (2025) Annual Average Daily Traffic Volumes* (No-Build Alternative)

Plate B - Eastern Segment

LEGEND

31,400 Two-Way AADT Volume

* Volumes are rounded to the nearest hundred

NOT TO SCALE

FPN#: 256931-1-32-01
DWG Date: January 12, 2001

Figure 3.7b

peak hour volumes for the No-Build Alternative are shown in **Figure 3.8** and **Figure 3.9** respectively.

3.2.2.2 Build Alternative

In order to develop the AADTs for the Build Alternative, the 20A network model was updated to reflect proposed changes to the study corridor that would result in structures at various points along the corridor. The resulting AADTs were very similar to the AADTs for the No-Build Alternative. Because the differences between the Build and No-Build traffic were attributable to minor fluctuations in the FSUTMS assignment results, the same AADTs were used for the two alternatives for most of the corridor. The AADTs for the two alternatives only vary at the intersections of Gandy Boulevard at Frontage Road and Gandy Boulevard at 9th Street North where, as described earlier, the addition of structures and signage will result in a redistribution of traffic in this area. The calculations and results of the turning movement analysis for the Build Alternative are presented in Appendix B**.** The estimated AADTs for the Build Alternative are depicted in **Figure 3.10**. The AM and PM estimated peak hour volumes for the Build Alternative are shown in **Figure 3.11** and **Figure 3.12** respectively.

It should be noted that all three of these figures contain two options for the intersection of Gandy Boulevard and Interstate 275. Option A contains only the currently existing ramps at this intersection. In Option B, a westbound Gandy Boulevard to northbound Interstate 275 ramp is added along with a southbound Interstate 275 to eastbound Gandy Boulevard ramp.

3.3 Future Operational Analyses

For the purposes of this study, future traffic analyses were conducted only for the design year (2025). However, three different alternatives were analyzed for this year. These included a No-Build Alternative and two Build Alternatives, a Build - At Grade Alternative and a Build – Structures Alternative. Version 3.2 of HCS was again used to arrive at LOS determinations for intersections, ramps, and roadway segments for each alternative. A description of each alternative, along with the corresponding results, is reported below.

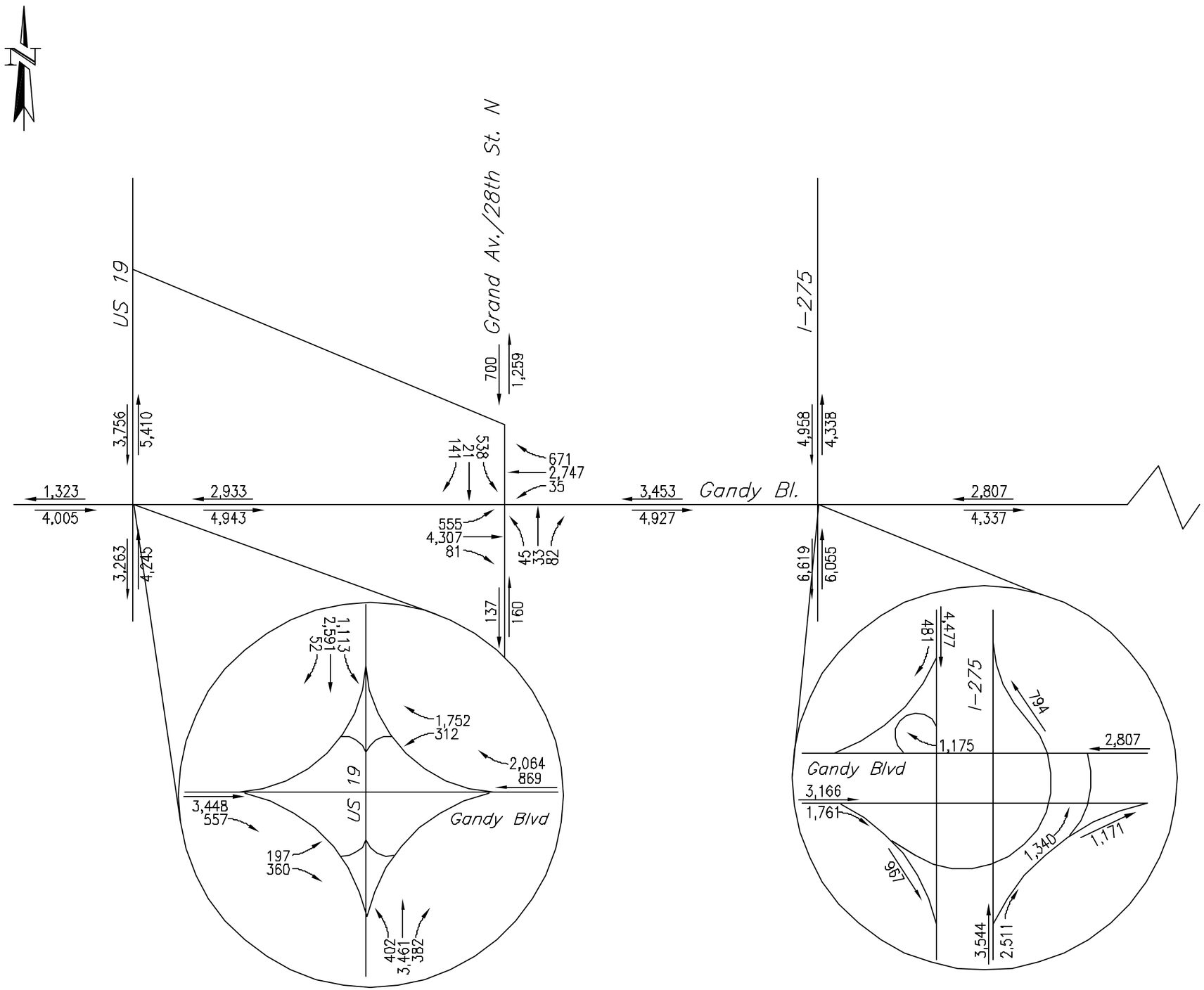

Florida Department of Transportation

SR 694 (Gandy Boulevard)

From US 19 to East of 4th Street
Pinellas County, Florida

Design Year (2025) AM Peak Hour Volumes (No-Build Alternative)

Plate A - Western Segment

NOT TO SCALE

FPN#: 256931-1-32-01
DWG Date: February 12, 2002

Figure 3.8a

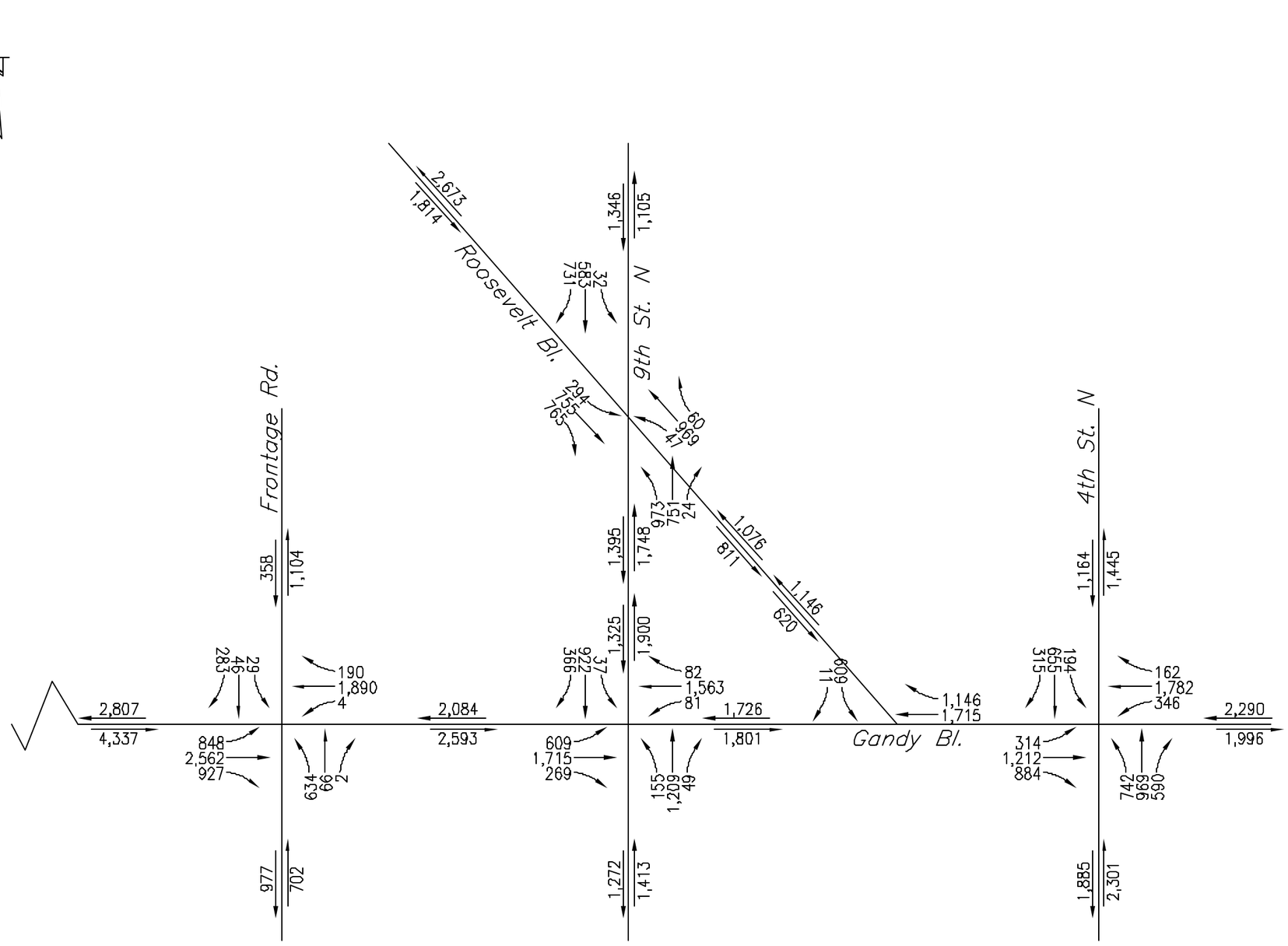

Florida Department of Transportation

SR 694 (Gandy Boulevard)

From US 19 to East of 4th Street
Pinellas County, Florida

Design Year (2025) AM Peak Hour Volumes (No-Build Alternative)

Plate B - Eastern Segment

NOT TO SCALE

FPN#: 256931-1-32-01
DWG Date: February 12, 2002

Figure 3.8b

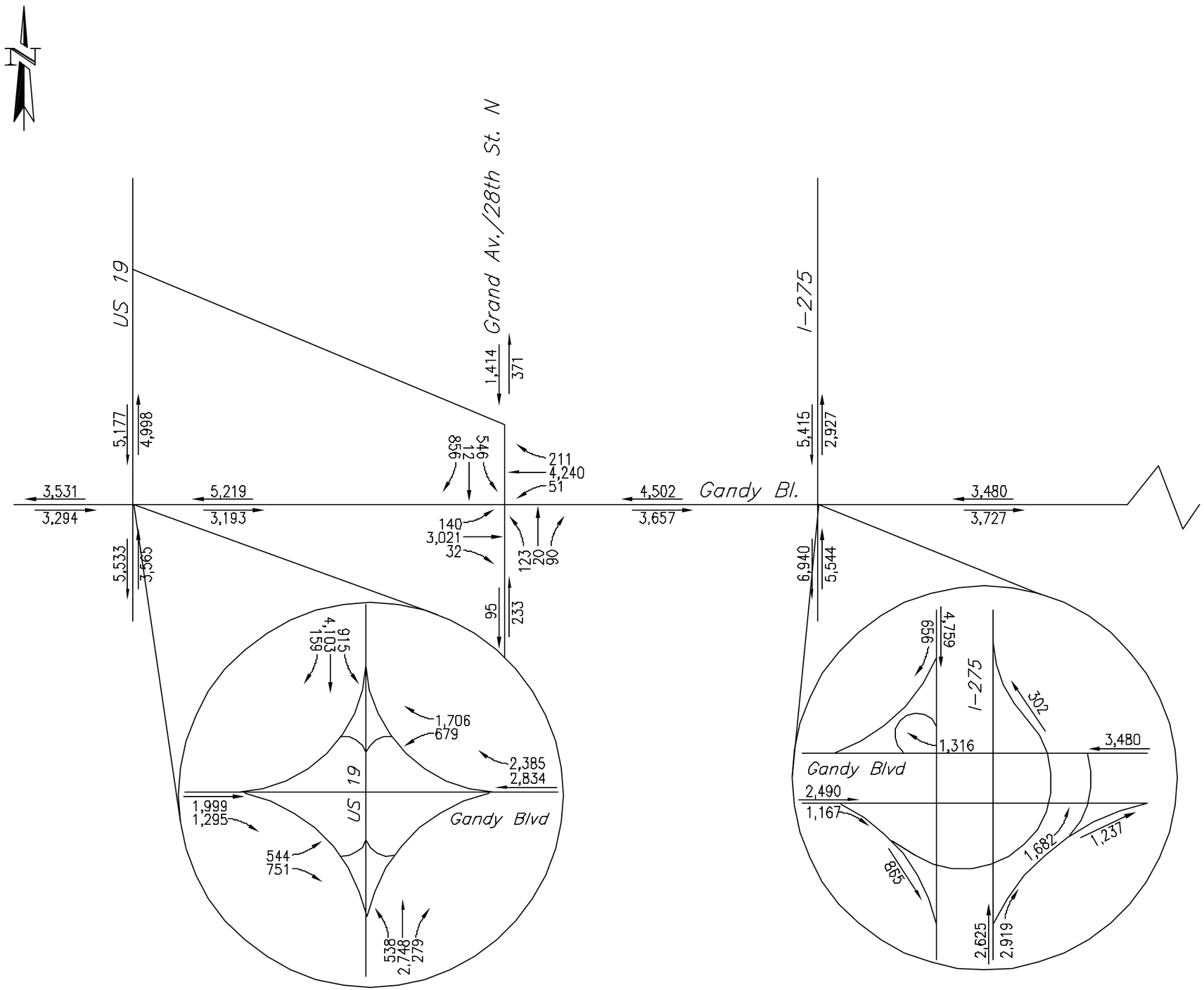

Florida
Department of Transportation

SR 694 (Gandy Boulevard)

From US 19 to East of 4th Street
Pinellas County, Florida

Design Year (2025)
PM Peak Hour Volumes
(No-Build Alternative)

Plate A - Western Segment

NOT TO SCALE

FPN#: 256931-1-32-01
DWG Date: January 12, 2001

Figure 3.9a

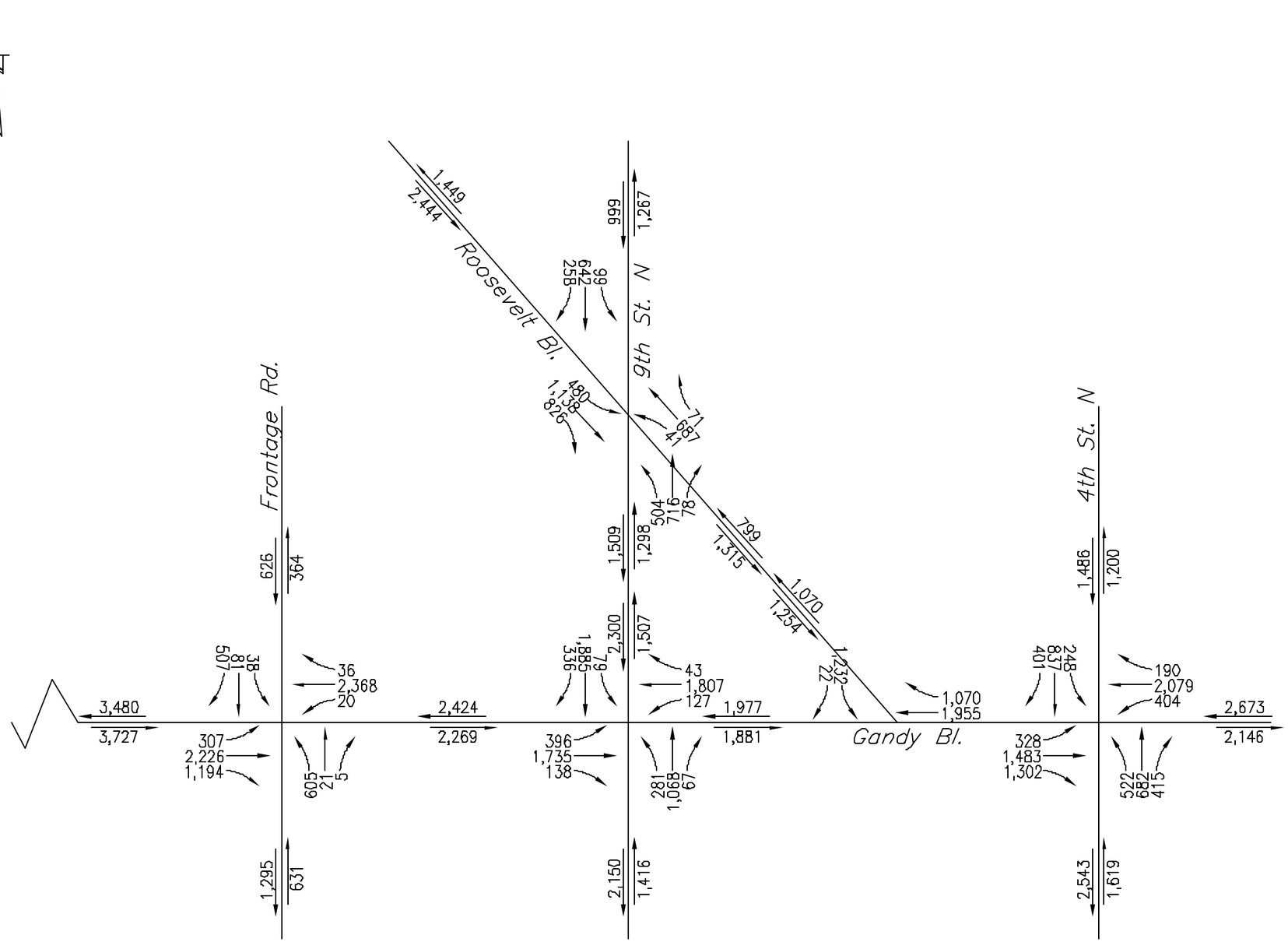

Florida Department of Transportation

SR 694 (Gandy Boulevard)

From US 19 to East of 4th Street
Pinellas County, Florida

Design Year (2025) PM Peak Hour Volumes (No-Build Alternative)

Plate B - Eastern Segment

NOT TO SCALE

FPN#: 256931-1-32-01
DWG Date: February 12, 2002

Figure 3.9b

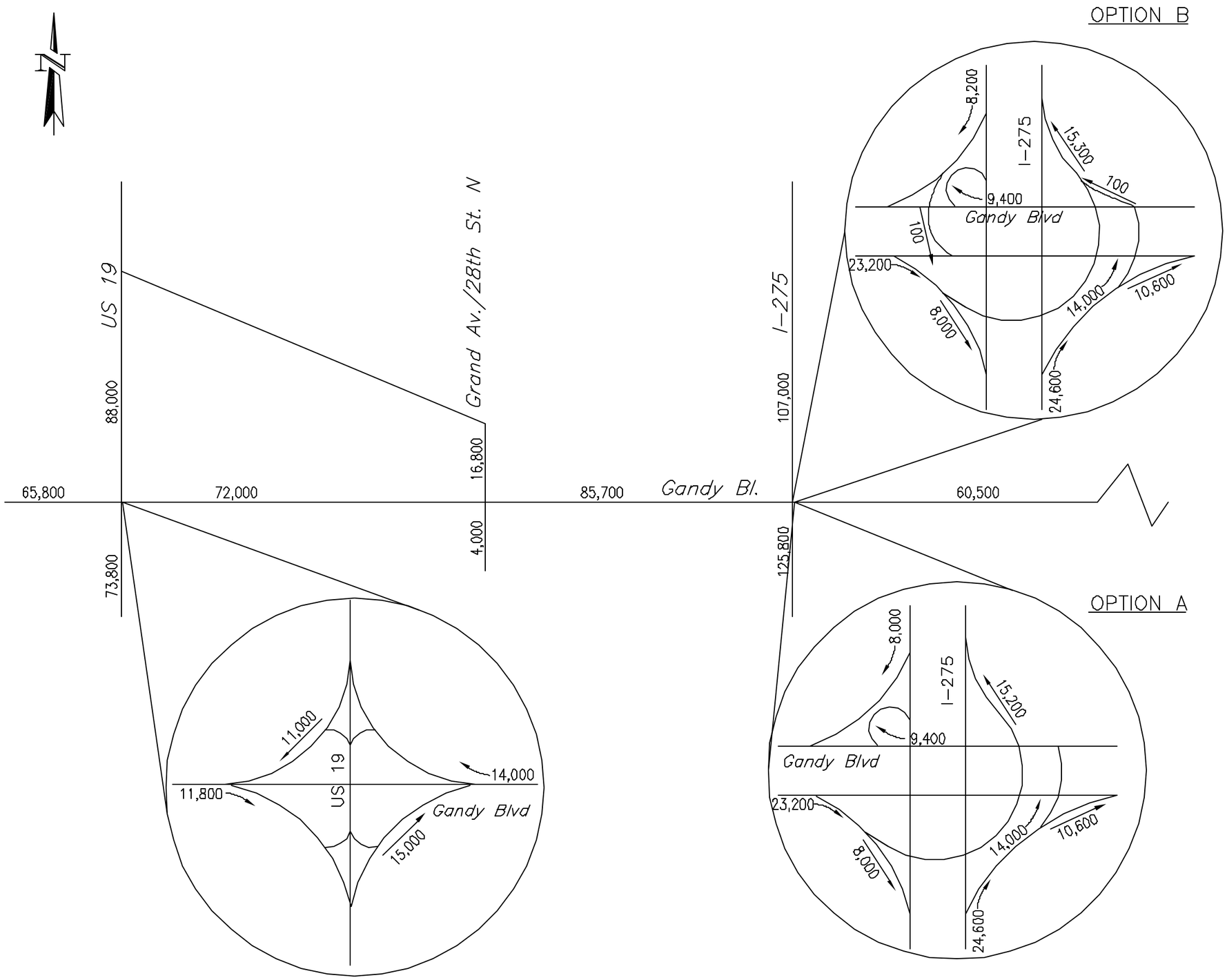

Florida Department of Transportation

SR 694 (Gandy Boulevard)

From US 19 to East of 4th Street
Pinellas County, Florida

Design Year (2025) Annual Average Daily Traffic Volumes* (Build Alternative)

Plate A - Western Segment

LEGEND

11,800 → Directional AADT Volume

72,000 Two-Way AADT Volume

* Volumes are rounded to the nearest hundred

NOT TO SCALE

FPN#: 256931-1-32-01
DWG Date: February 12, 2002

Figure 3.10a

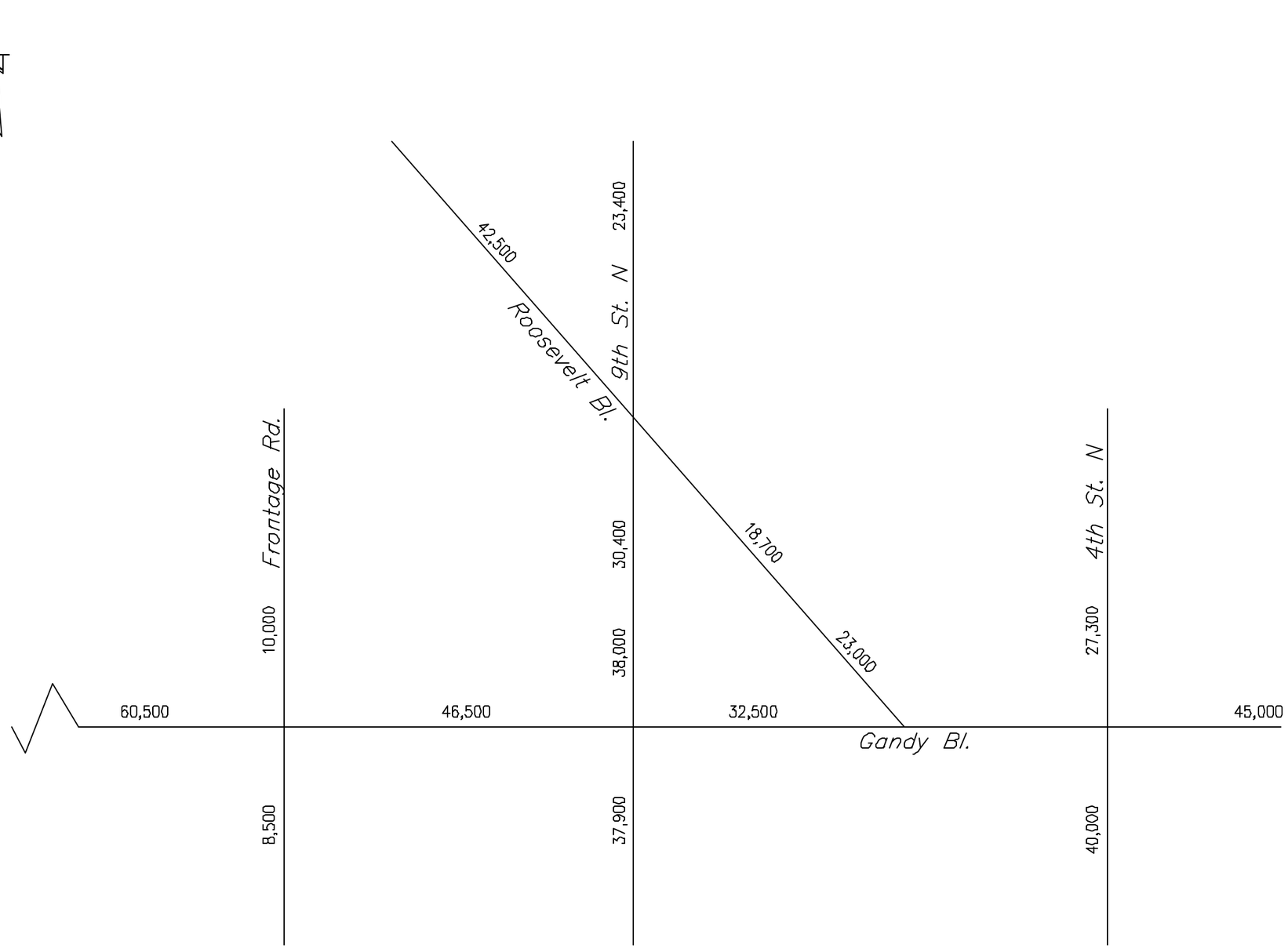

Florida Department of Transportation

SR 694 (Gandy Boulevard)

From US 19 to East of 4th Street
Pinellas County, Florida

Design Year (2025) Annual Average Daily Traffic Volumes* (Build Alternative)

Plate B - Eastern Segment

LEGEND

32,500 Two-Way AADT Volume

* Volumes are rounded to the nearest hundred

NOT TO SCALE

FPN#: 256931-1-32-01
DWG Date: January 12, 2001

Figure 3.10b

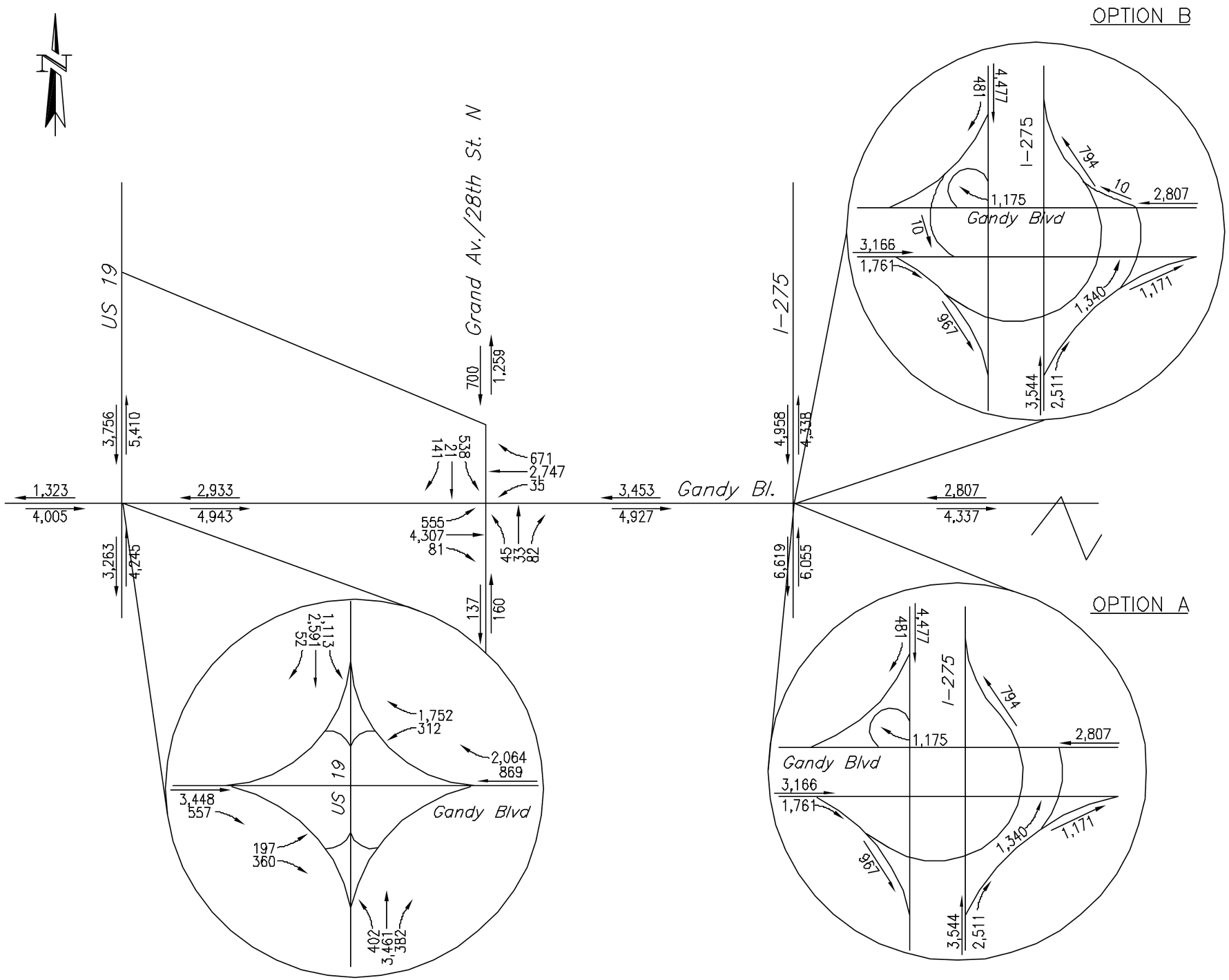

Florida Department of Transportation

SR 694 (Gandy Boulevard)

From US 19 to East of 4th Street
Pinellas County, Florida

Design Year (2025) AM Peak Hour Volumes (Build Alternative)

Plate A - Western Segment

NOT TO SCALE

FPN#: 256931-1-32-01
DWG Date: January 12, 2001

Figure3.11a

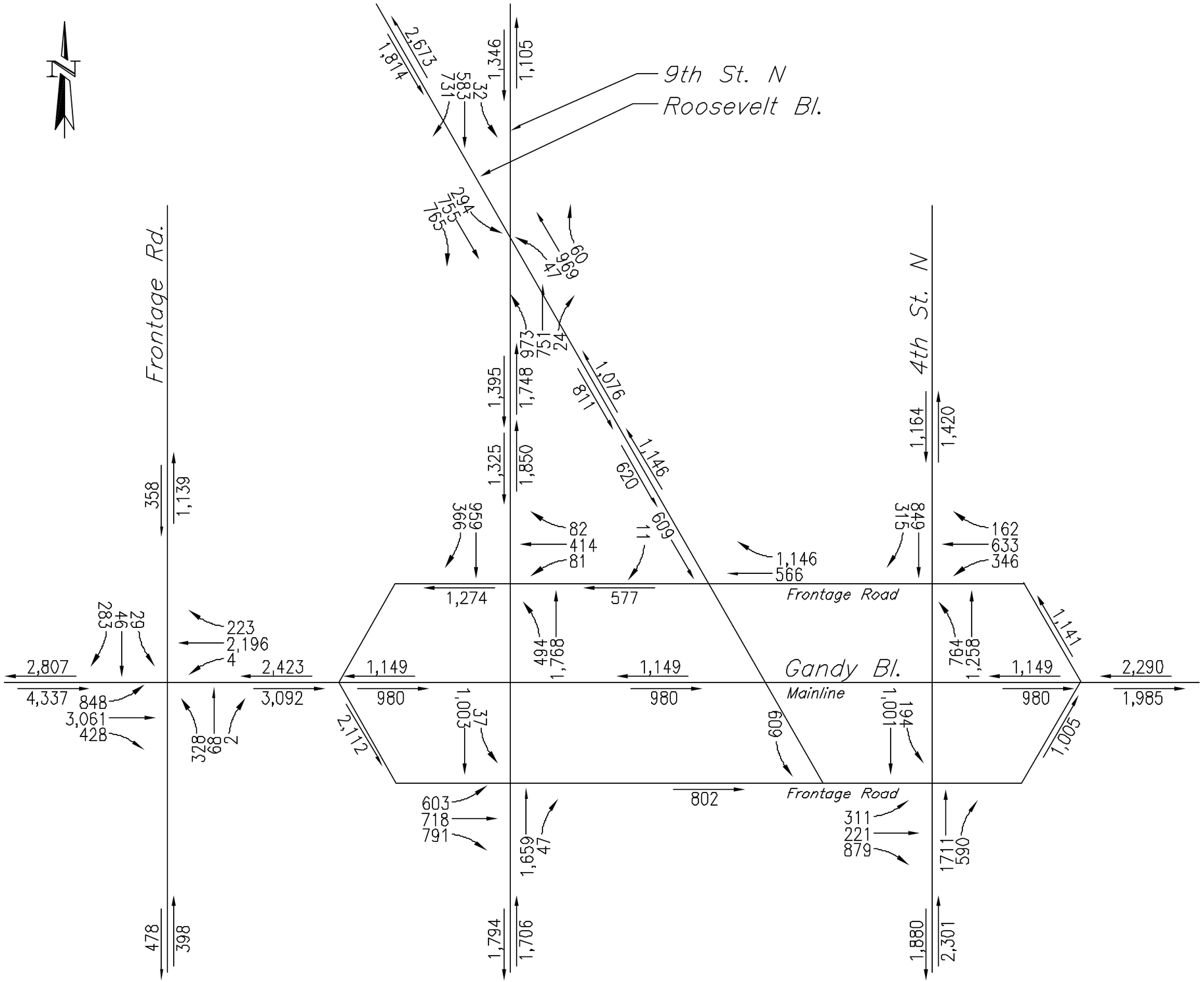

Florida Department of Transportation

SR 694 (Gandy Boulevard)

From US 19 to East of 4th Street
Pinellas County, Florida

Design Year (2025) AM Peak Hour Volumes (Build Alternative)

Plate B - Eastern Segment

NOT TO SCALE

FPN#: 256931-1-32-01
DWG Date: February 12, 2002

Figure 3.11b

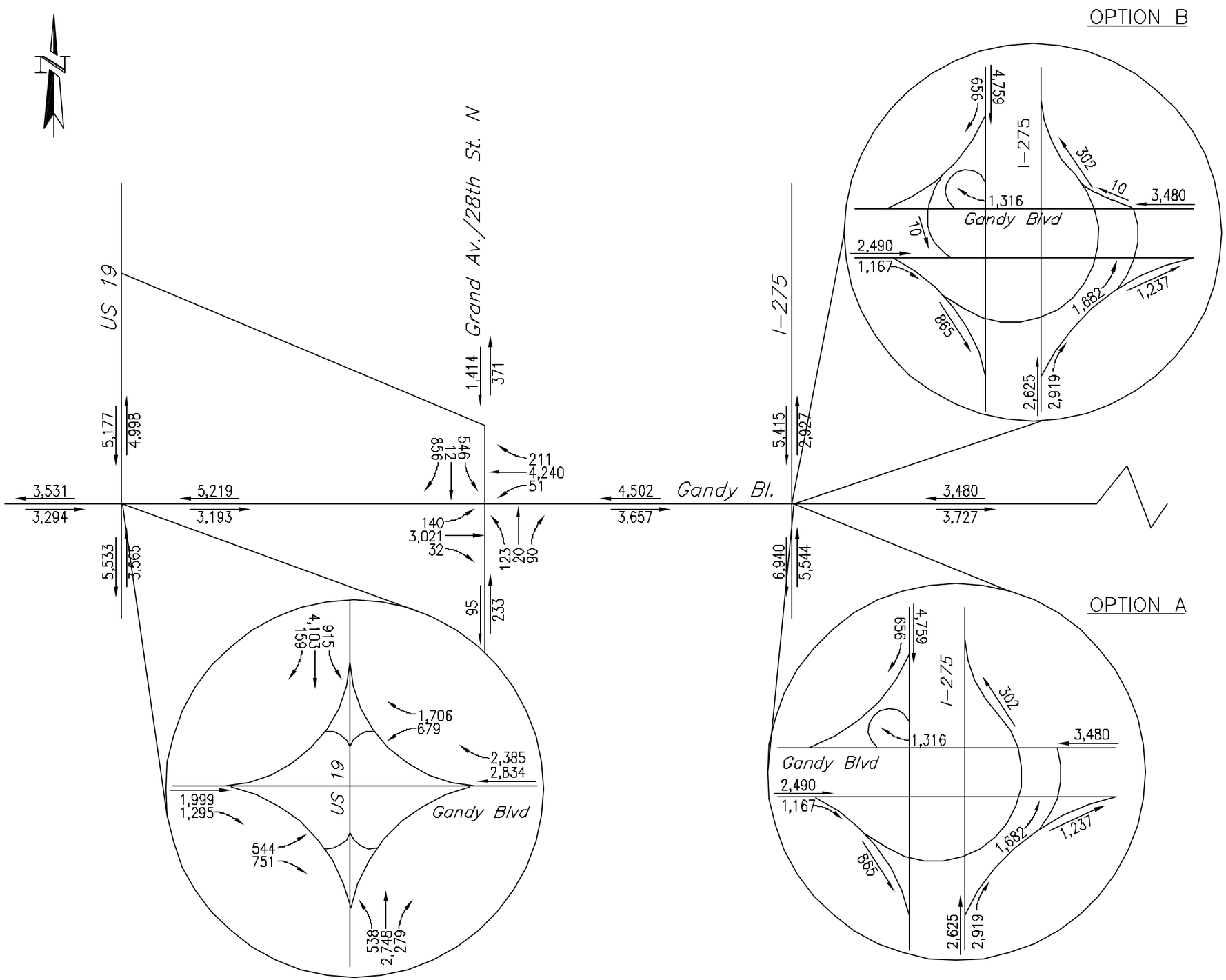

Florida Department of Transportation

SR 694 (Gandy Boulevard)

From US 19 to East of 4th Street
Pinellas County, Florida

Design Year (2025) PM Peak Hour Volumes (Build Alternative)

Plate A - Western Segment

NOT TO SCALE

FPN#: 256931-1-32-01
DWG Date: January 12, 2001

Figure 3.12a

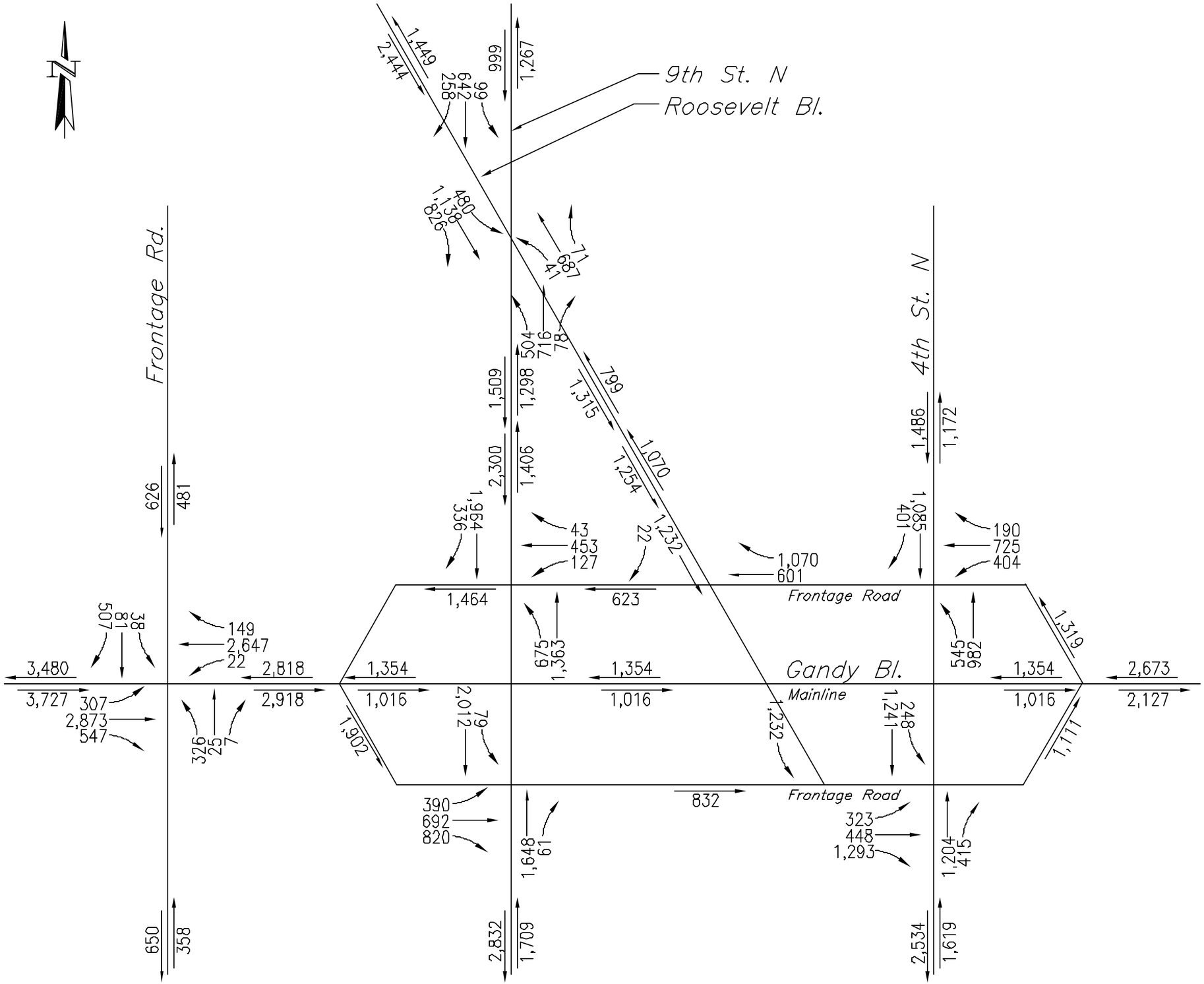

Florida Department of Transportation

SR 694 (Gandy Boulevard)

From US 19 to East of 4th Street
Pinellas County, Florida

Design Year (2025) PM Peak Hour Volumes (Build Alternative)

Plate B - Eastern Segment

NOT TO SCALE

FPN#: 256931-1-32-01
DWG Date: February 12, 2002

Figure 3.12b

3.3.1 No-Build Alternative

As mentioned previously, this alternative demonstrates how the study corridor will operate if no improvements, other than those already committed, are made. For this alternative, the No-Build traffic projections described in section 3.2.2.1 were used.

3.3.1.1 Operational Analyses for Intersections and Ramps

The results of the LOS analyses for the design year (2025) No-Build Alternative indicate that more of the ramps will begin to fail with the increase in traffic volumes. The results of the analyses for both intersections and ramps are displayed in **Table 3.1** and depicted on **Figure 3.13** and **Figure 3.14**. Nine of the twelve ramps examined will operate at LOS F in the AM peak hour in 2025 under the No-Build Alternative. Six ramps will operate at LOS F in the PM peak hour. Only two ramps will operate at LOS D or better in both the AM and PM peak hour. The full results of the design year (2025) analyses for intersections and ramps can be found in **Appendix F**.

The HCS analyses indicate a breakdown in LOS for study intersections in 2025 under the No-Build Alternative. During the AM peak hour the intersection of Gandy Boulevard and Roosevelt Boulevard will operate at LOS D. All other intersections will operate at LOS F. Intersections experiencing particularly long delays include Gandy Boulevard and US 19 (274.6 sec/veh), Gandy Boulevard and the northbound Interstate 275 off ramp (339.5 sec/veh), and Gandy Boulevard and Frontage Road (304.5 sec/veh).

In the PM peak hour, all intersections will operate at LOS F. Intersections experiencing particularly long delays in the PM peak hour include Gandy Boulevard and US 19 (307.1 sec/veh), Gandy Boulevard and Grand Avenue (343.3 sec/veh), Gandy Boulevard and the northbound Interstate 275 off ramp (377.5 sec/veh), and Gandy Boulevard and Frontage Road (218.0 sec/veh). The delay for all other intersections can be found in the full results of the signalized intersection analysis in Appendix F.

Table 3.1
Design Year (2025) AM and PM Peak Hour Level of Service-Intersections and Ramps (No-Build Alternative)

Location	AM LOS	PM LOS
Intersection		
Gandy Blvd @ US 19	F	F
Gandy Blvd @ Grand Ave (28th St)	F	F
Gandy Blvd @ I-275	F	F
Gandy Blvd @ Frontage Rd	F	F
EB Gandy Blvd @ 9th St N	F	F
WB Gandy Blvd @ 9th St N	F	F
Gandy Blvd @ Roosevelt Blvd	D	F
Gandy Blvd @ 4th St N	F	F
Roosevelt Blvd @ 9th St N	F	F
Ramp		
EB Gandy to I-275 Diverge	F	D
EB Gandy to NB I-275 Merge	F	B
EB Gandy to SB I-275 Merge	F	F
NB I-275 to Gandy Diverge	F	F
SB I-275 to WB Gandy Diverge	F	F
SB I-275 to WB Gandy Merge	D	F
WB Gandy to SB I-275 Diverge	F	D
WB Gandy to SB I-275 Merge	F	F
EB Gandy to US 19 Diverge	C	C
US 19 to EB Gandy Merge	F	C
US 19 to WB Gandy Merge	B	C
WB Gandy to US 19 Diverge	F	F

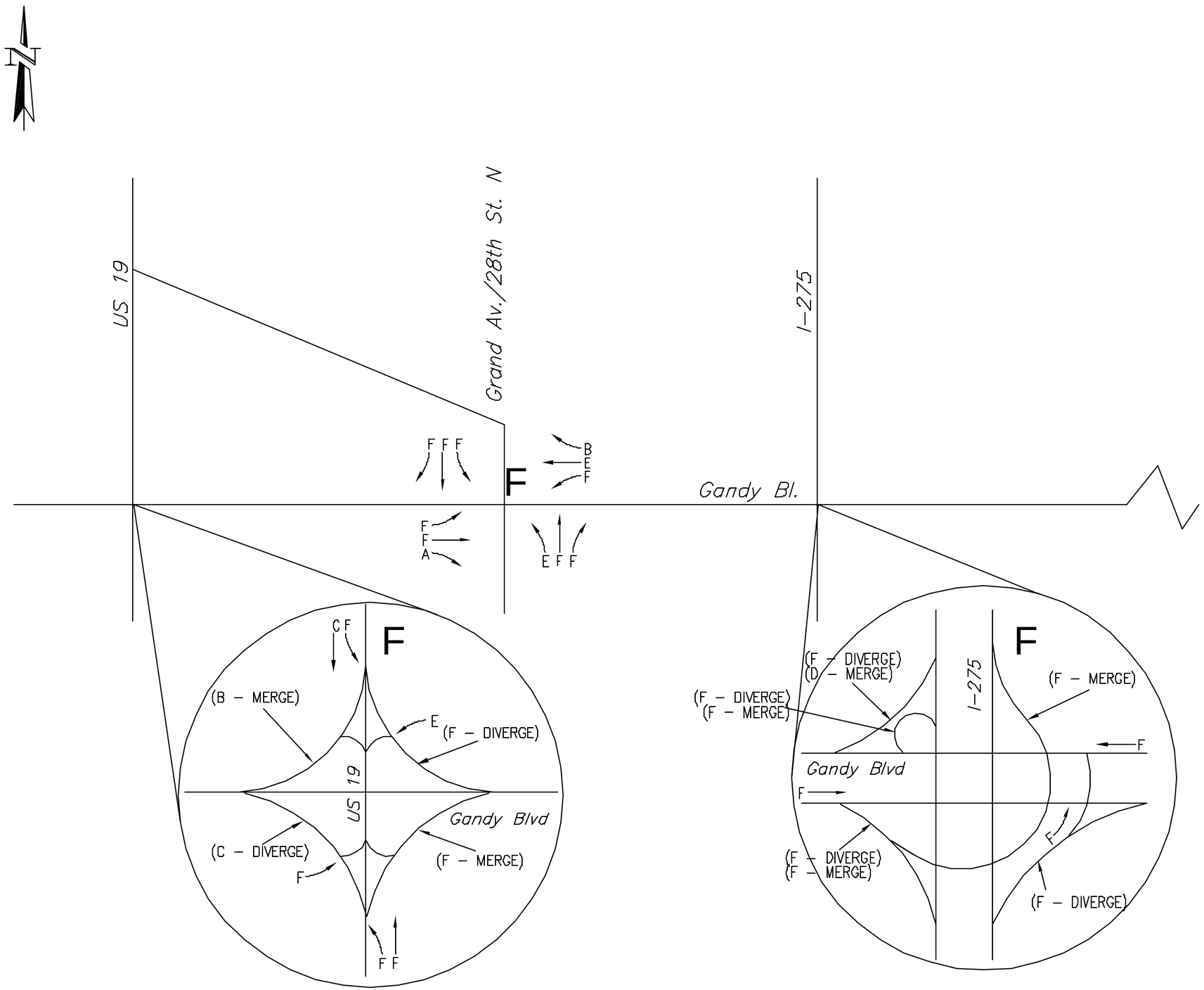

Florida Department of Transportation

SR 694 (Gandy Boulevard)

From US 19 to East of 4th Street
Pinellas County, Florida

Design Year (2025) AM Peak Hour Level of Service (No-Build Alternative)

Plate A - Western Segment

LEGEND

F →	Turning Movement Level of Service
F	Overall Intersection Level of Service
(F – DIVERGE)	Ramp Merge/Diverge Level of Service

NOT TO SCALE

FPN#: 256931-1-32-01
DWG Date: January 12, 2001

Figure 3.13a

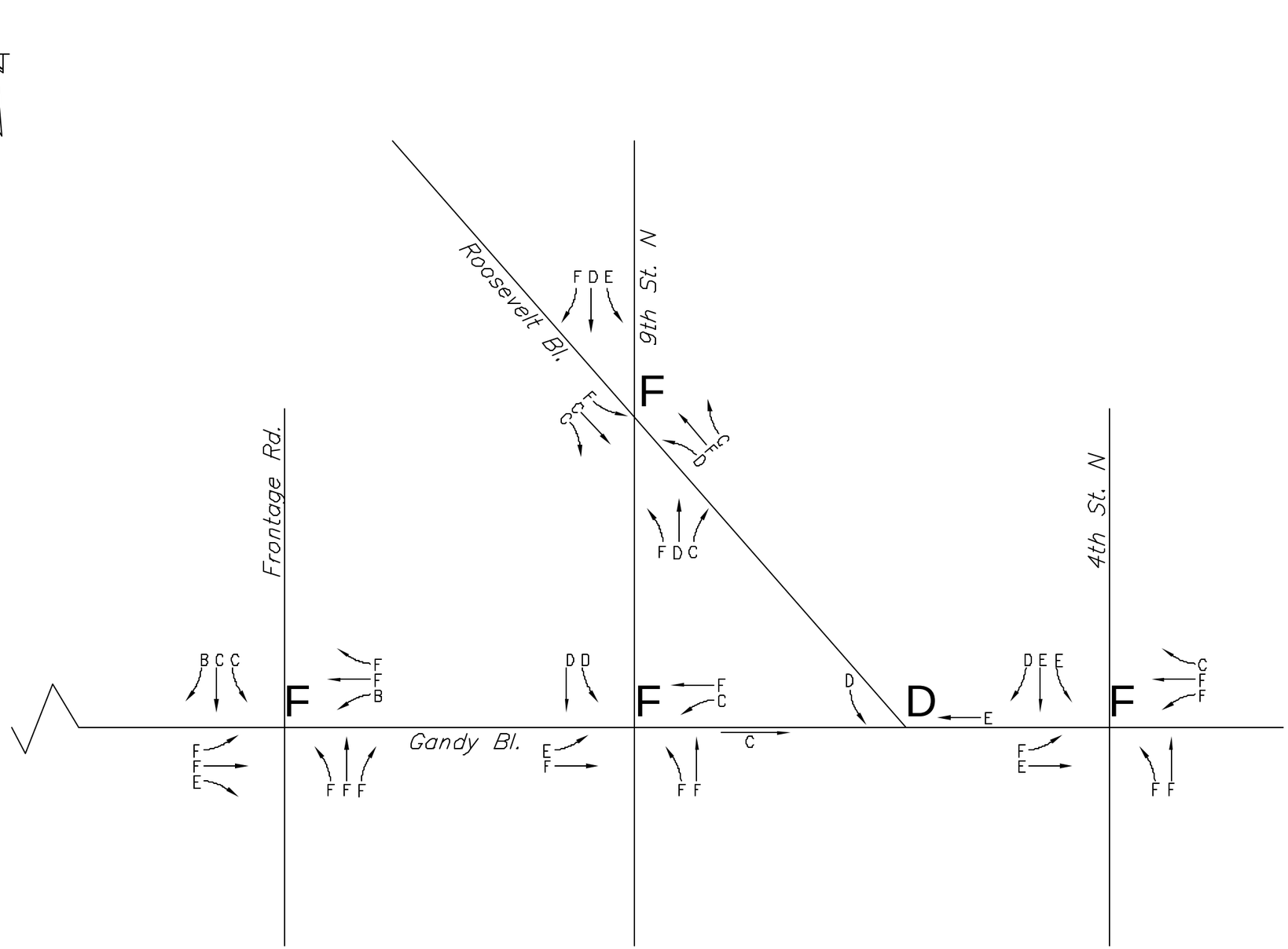

Florida Department of Transportation

SR 694 (Gandy Boulevard)

From US 19 to East of 4th Street
Pinellas County, Florida

Design Year (2025) AM Peak Hour Level of Service (No-Build Alternative)

Plate B - Eastern Segment

LEGEND

F → Turning Movement Level of Service

F Overall Intersection Level of Service

Note: The intersection of Gandy Blvd and 9th St N. was analyzed as two separate intersections. The worst LOS is reported.

NOT TO SCALE

FPN#: 256931-1-32-01
DWG Date: January 12, 2001

Figure 3.13b

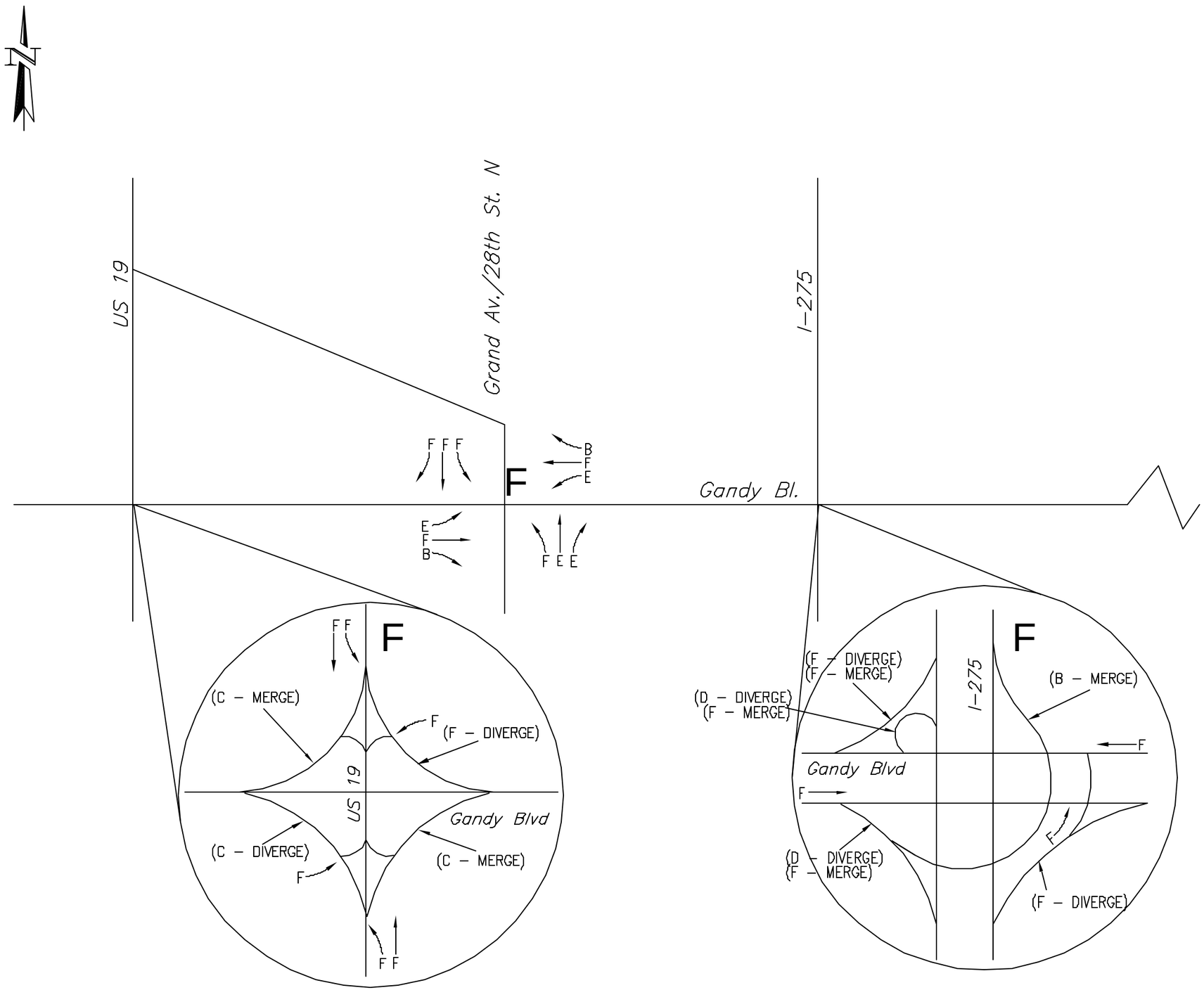

Florida Department of Transportation

SR 694 (Gandy Boulevard)

From US 19 to East of 4th Street
Pinellas County, Florida

Design Year (2025) PM Peak Hour Level of Service (No-Build Alternative)

Plate A - Western Segment

LEGEND

F →	Turning Movement Level of Service
F	Overall Intersection Level of Service
(D – DIVERGE)	Ramp Merge/Diverge Level of Service

NOT TO SCALE

FPN#: 256931-1-32-01
DWG Date: January 12, 2001

Figure 3.14a

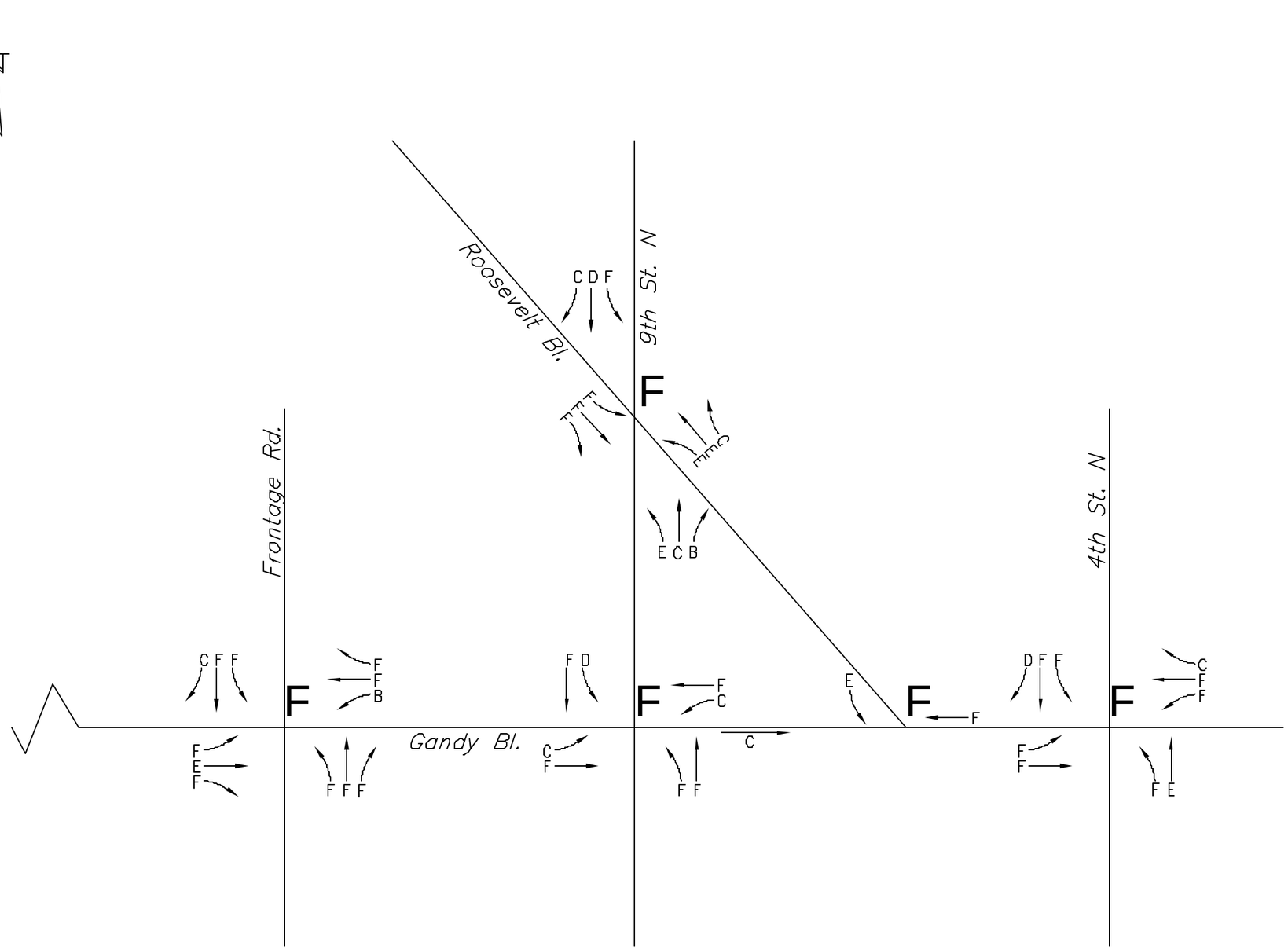

Florida Department of Transportation

SR 694 (Gandy Boulevard)

From US 19 to East of 4th Street
Pinellas County, Florida

Design Year (2025) PM Peak Hour Level of Service (No-Build Alternative)

Plate B - Eastern Segment

LEGEND

F → Turning Movement Level of Service

F Overall Intersection Level of Service

Note: The intersection of Gandy Blvd and 9th St N. was analyzed as two separate intersections. The worst LOS is reported.

NOT TO SCALE

FPN#: 256931-1-32-01
DWG Date: January 12, 2001

Figure 3.14b

3.3.1.2 Operational Analyses for Roadway Segments

The results of the arterial analyses also represent a worsening in the LOS. An examination of the results for Gandy Boulevard indicates that the segment of this roadway within the study corridor will operate at LOS F in both the eastbound and westbound directions in the AM peak hour as well as the PM peak hour in 2025 under the No-Build Alternative. A summary of the results of the arterial LOS analyses can be seen in **Table 3.2.** The full results of the analyses can be found in Appendix F.

3.3.2 Build - At Grade Alternative

As mentioned previously, operational analyses were performed for two different build alternatives. The Build – At Grade Alternative involves only at grade improvements to the study corridor. For this alternative, the No-Build traffic projections were used as the basis of evaluation. Although this is a Build Alternative, the Build Alternative traffic projections were not used due to the fact that these projections assume the existence of new structures along the corridor. Since the No-Build and Build traffic projections differ only at two intersections, due to the influence that structures will have on traffic distribution at these intersections, the use of No-Build traffic projections for these analyses will produce the most realistic estimate of traffic and associated delay in the corridor.

In order to determine what improvements were necessary, the 2025 AM and PM projected peak hour volumes were analyzed and the improvements needed to allow each intersection to operate at LOS D or better were estimated. Before these improvements were entered into HCS to determine the level of service, it was first necessary to optimize the signal timing and phasing for the new lane configuration at each intersection. Synchro 5 software was used to perform this optimization. The results of the signal optimization process for each intersection are presented in **Appendix G**. The timing suggested by Synchro 5 was sometimes very short for movements with a low percentage of the total volume for the intersection, resulting in extremely long delays for these movements. Where deemed necessary, slight adjustments were made to the signal timing to reduce the delay for these movements and yield more reasonable results.

Table 3.2
Design Year (2025) AM and PM Peak Hour Level of Service-Roadway Segments (No-Build Alternative)

Segment	AM LOS	PM LOS
WB Gandy Blvd		
4th St N to Roosevelt Blvd	F	F
Roosevelt Blvd to 9th St N	F	F
9th St N to Frontage Rd	F	F
Frontage Rd to I-275	F	F
I-275 to Grand Ave (28th St)	D	F
Overall Arterial LOS	**F**	**F**
EB Gandy Blvd		
US 19 to Grand Ave (28th St)	F	F
Grand Ave to I-275	F	F
I-275 to Frontage Rd	F	E
Frontage Rd to 9th St N	F	F
9th St N to Roosevelt Blvd	C	D
Roosevelt Blvd to 4th St N	F	F
Overall Arterial LOS	**F**	**F**

Once the new lane configurations, volumes, and signal timing and phasing were entered, the resulting LOS for each intersection was examined for both the AM and PM peak period. Where the LOS was worse than LOS D, lanes were added to a particular movement unless the maximum number of lanes realistically possible had already been included. If the LOS for both periods was LOS D or better, some of the lanes were removed and the LOS determination was made again to see if LOS D could be obtained with less improvements. This process was continued until the minimum number of lanes necessary to allow the intersection to operate at LOS D or better in both the AM and PM peak period was determined.

It was assumed that Gandy Boulevard will be upgraded to three lanes or more in both directions for the entire length of the study corridor. Accordingly, the number of eastbound and westbound through lanes was not reduced to less than three at any Gandy Boulevard intersection regardless of the level of service. The resulting lane configuration at each intersection is presented in **Figure 3.15**. The intersection of Gandy Boulevard at the proposed southbound Interstate 275 to eastbound Gandy Boulevard off ramp was assumed to be at grade in the Build - At Grade analyses.

3.3.2.1 Operational Analyses for Intersections and Ramps

The results of the HCS analyses for the design year (2025) Build - At Grade Alternative indicate that most of the ramps in the corridor will operate at a satisfactory level of service. The results of the analyses for both intersections and ramps for the Build - At Grade Alternative are displayed in **Table 3.3** and depicted in **Figure 3.16** and **Figure 3.17**. The full results of these analyses can be found in Appendix F. Eight of the twelve ramps analyzed will operate at better than LOS D in both the AM and PM peak hour. However, three ramps will operate at LOS F in both the AM and PM peak hour and one other will operate at LOS F in the PM peak hour.

The results of the HCS analyses for signalized intersections indicate that at grade improvements alone will not allow all corridor intersections to achieve LOS D or better in both the AM and PM peak hour. In fact, six intersections fail to meet this standard under this alternative. However, the delays experienced at study intersections are much shorter than those experienced under the

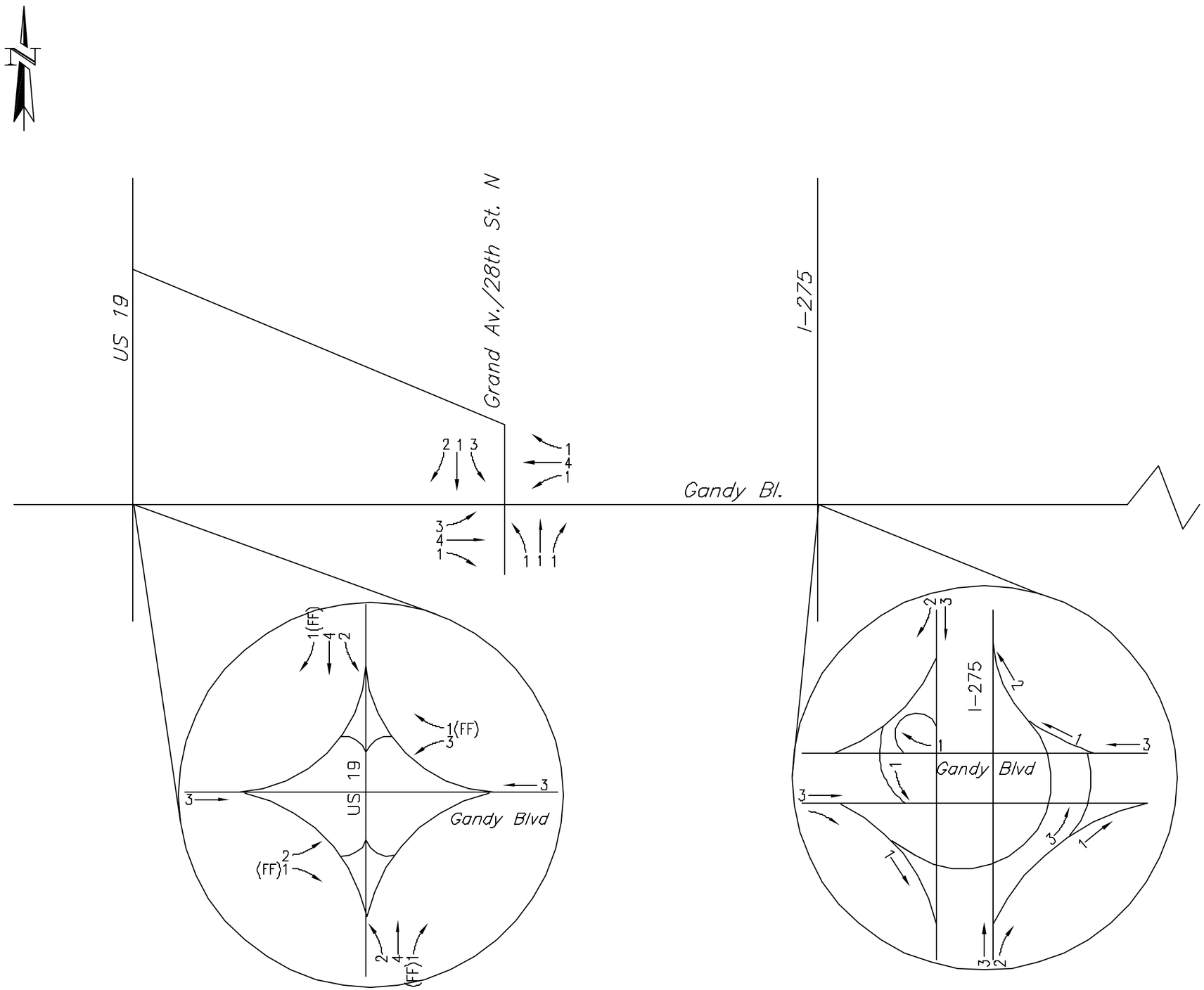

Florida Department of Transportation

SR 694 (Gandy Boulevard)

From US 19 to East of 4th Street
Pinellas County, Florida

Proposed Lane Configuration (Build-At Grade Alternative)

Plate A - Western Segment

LEGEND

(FF) Free Flow Movement

3 → Number of lanes at intersection, on overpass, or on ramp

NOT TO SCALE

FPN#: 256931-1-32-01
DWG Date: January 12, 2001

Figure 3.15a

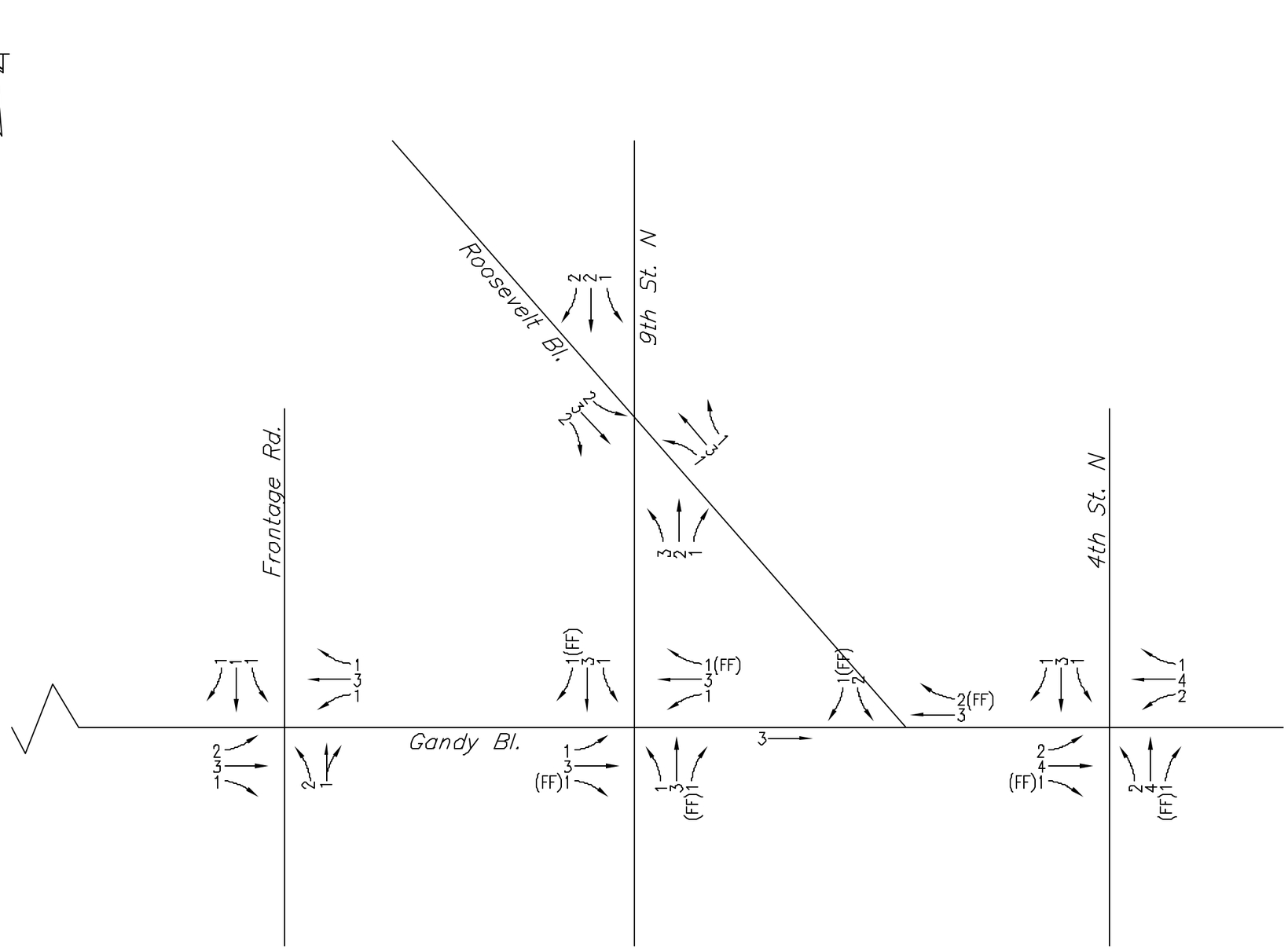

Florida Department of Transportation

SR 694 (Gandy Boulevard)

From US 19 to East of 4th Street
Pinellas County, Florida

Proposed Lane Configuration (Build-At Grade Alternative)

Plate B - Eastern Segment

LEGEND

(FF) Free Flow Movement

3 → Number of lanes at intersection, on overpass, or on ramp

NOT TO SCALE

FPN#: 256931-1-32-01
DWG Date: January 12, 2001

Figure 3.15b

Table 3.3
Design Year (2025) AM and PM Peak Hour Level of Service-Intersections and Ramps (Build - At Grade Alternative)

Location	AM LOS	PM LOS
Intersection		
Gandy Blvd @ US 19	E	F
Gandy Blvd @ Grand Ave (28th St)	E	F
Gandy Blvd @ I-275 SB Off Ramp	B	B
Gandy Blvd @ I-275 NB Off Ramp	D	F
Gandy Blvd @ Frontage Rd	E	F
EB Gandy Blvd @ 9th St N	D	D
WB Gandy Blvd @ 9th St N	D	E
Gandy Blvd @ Roosevelt Blvd	C	D
Gandy Blvd @ 4th St N	E	E
Roosevelt Blvd @ 9th St N	D	D
Ramp		
EB Gandy to I-275 Diverge	C	B
EB Gandy to NB I-275 Merge	B	A
EB Gandy to SB I-275 Merge	F	F
NB I-275 to Gandy Diverge	F	F
SB I-275 to WB Gandy Diverge	A	B
SB I-275 to WB Gandy Merge	B	C
WB Gandy to SB I-275 Diverge	C	C
WB Gandy to SB I-275 Merge	D	F
EB Gandy to US 19 Diverge	C	C
US 19 to EB Gandy Merge	C	B
US 19 to WB Gandy Merge	A	B
WB Gandy to US 19 Diverge	F	F

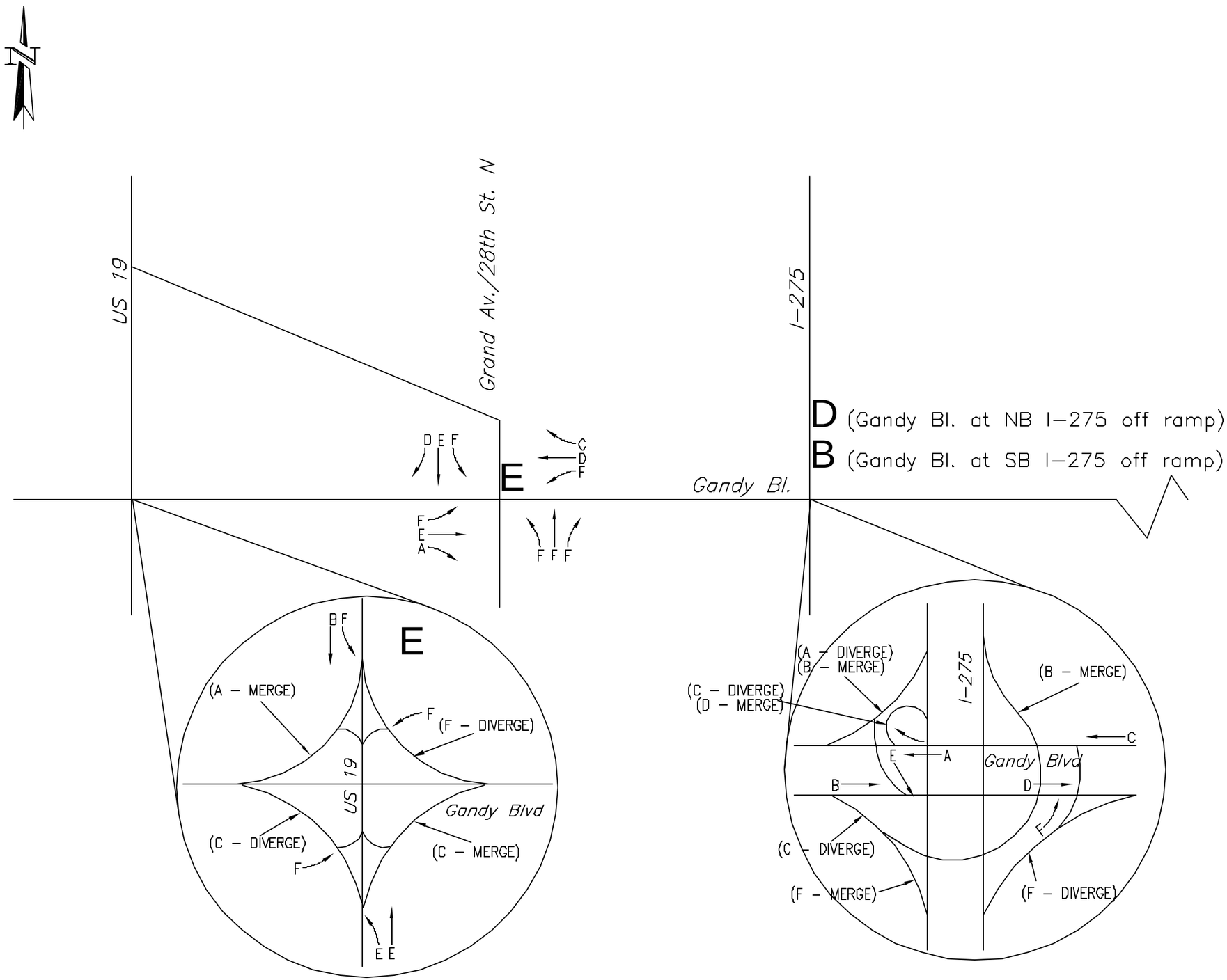

Florida Department of Transportation

SR 694 (Gandy Boulevard)

From US 19 to East of 4th Street
Pinellas County, Florida

Design Year (2025) AM Peak Hour Level of Service (Build-At Grade Alternative)

Plate A - Western Segment

LEGEND

B →	Turning Movement Level of Service
E	Overall Intersection Level of Service
(C - DIVERGE)	Ramp Merge/Diverge Level of Service

NOT TO SCALE

FPN#: 256931-1-32-01
DWG Date: January 12, 2001

Figure 3.16a

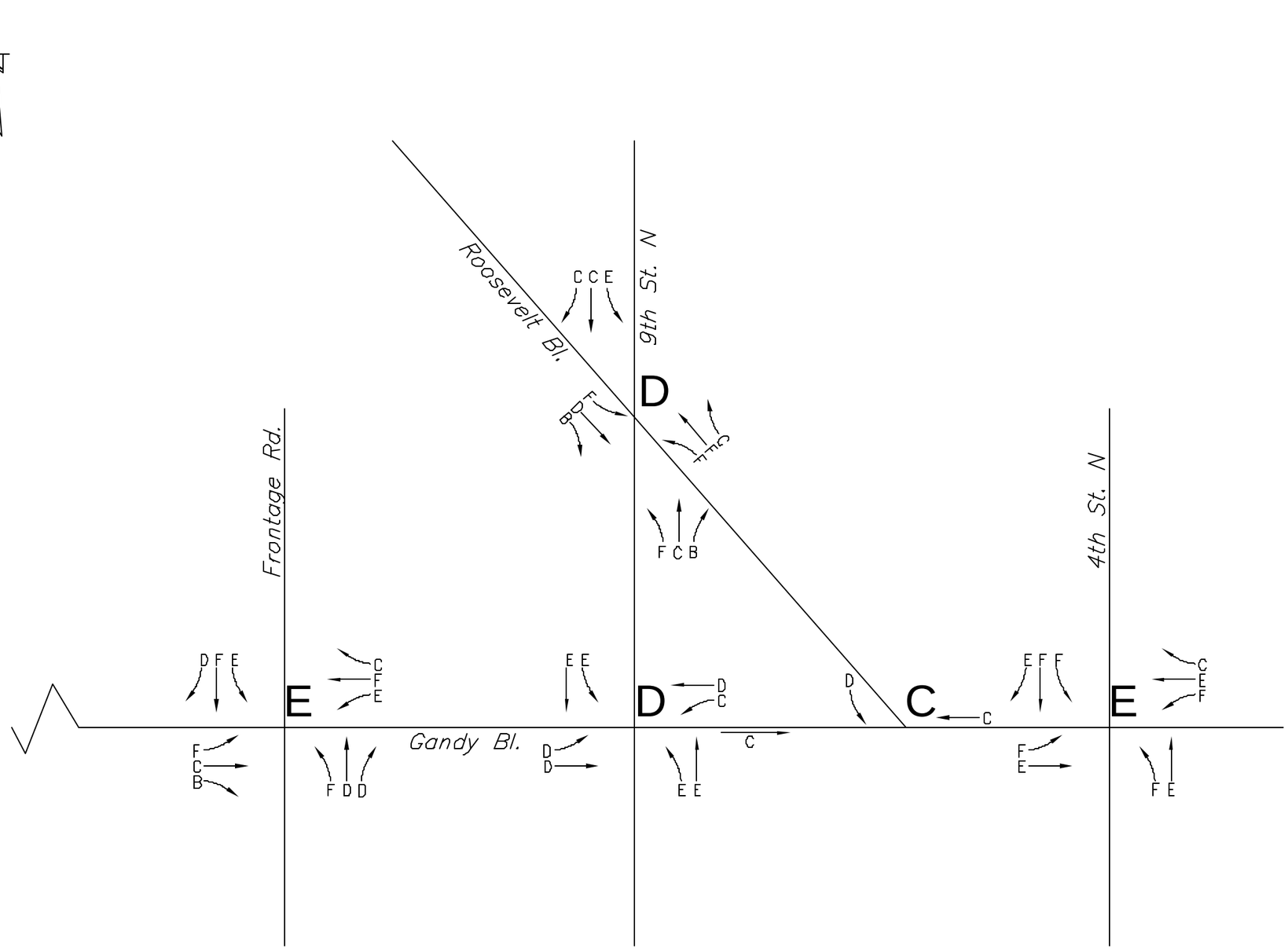

Florida Department of Transportation

SR 694 (Gandy Boulevard)

From US 19 to East of 4th Street
Pinellas County, Florida

Design Year (2025) AM Peak Hour Level of Service (Build-At Grade Alternative)

Plate B - Eastern Segment

LEGEND

C → Turning Movement Level of Service

D Overall Intersection Level of Service

Note: The intersection of Gandy Blvd and 9th St N. was analyzed as two separate intersections. The worst LOS is reported.

NOT TO SCALE

FPN#: 256931-1-32-01
DWG Date: January 12, 2001

Figure 3.16b

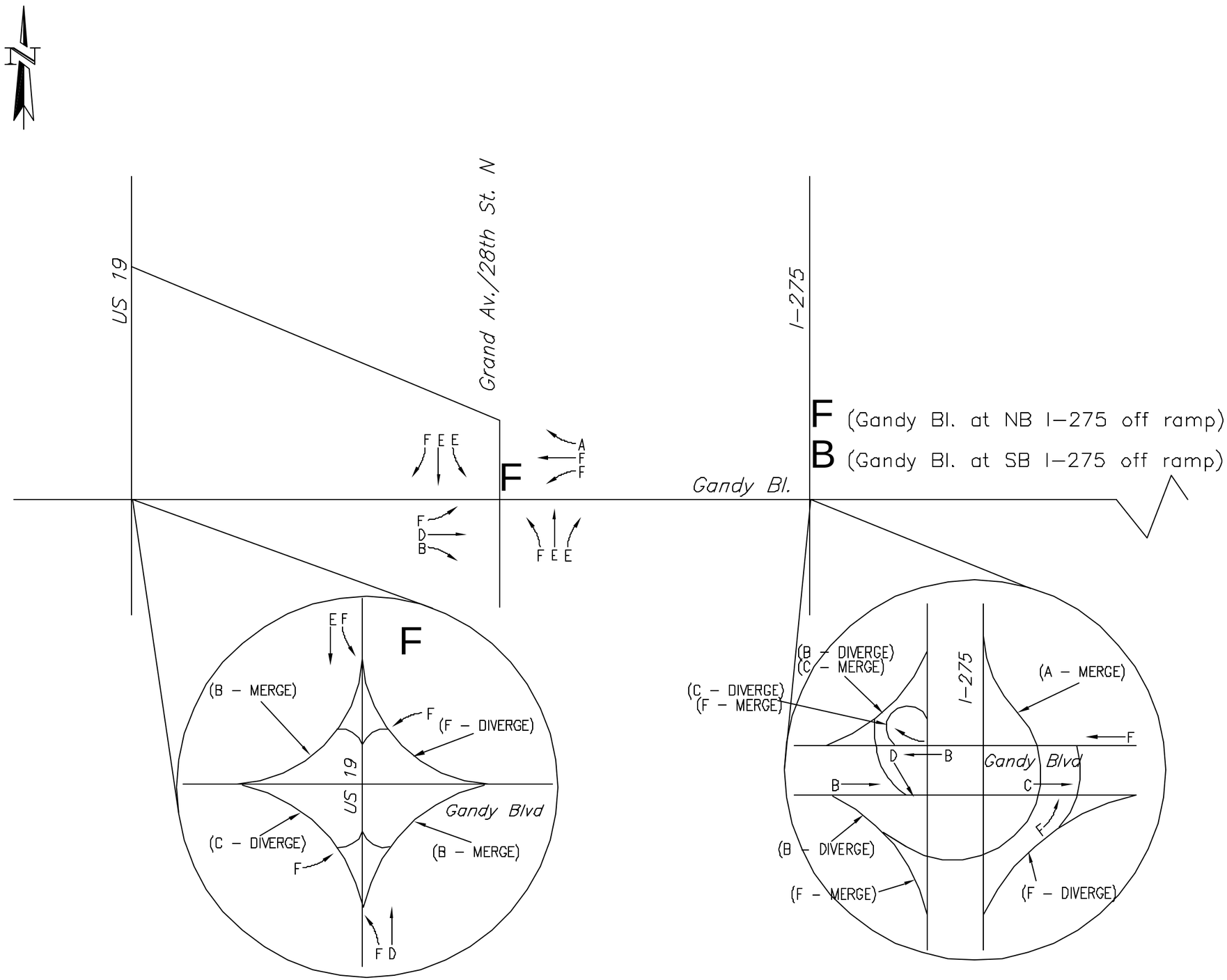

Florida Department of Transportation

SR 694 (Gandy Boulevard)

From US 19 to East of 4th Street
Pinellas County, Florida

Design Year (2025) PM Peak Hour Level of Service (Build-At Grade Alternative)

Plate A - Western Segment

LEGEND

D →	Turning Movement Level of Service
F	Overall Intersection Level of Service
(B – DIVERGE)	Ramp Merge/Diverge Level of Service

NOT TO SCALE

FPN#: 256931-1-32-01
DWG Date: January 12, 2001

Figure 3.17a

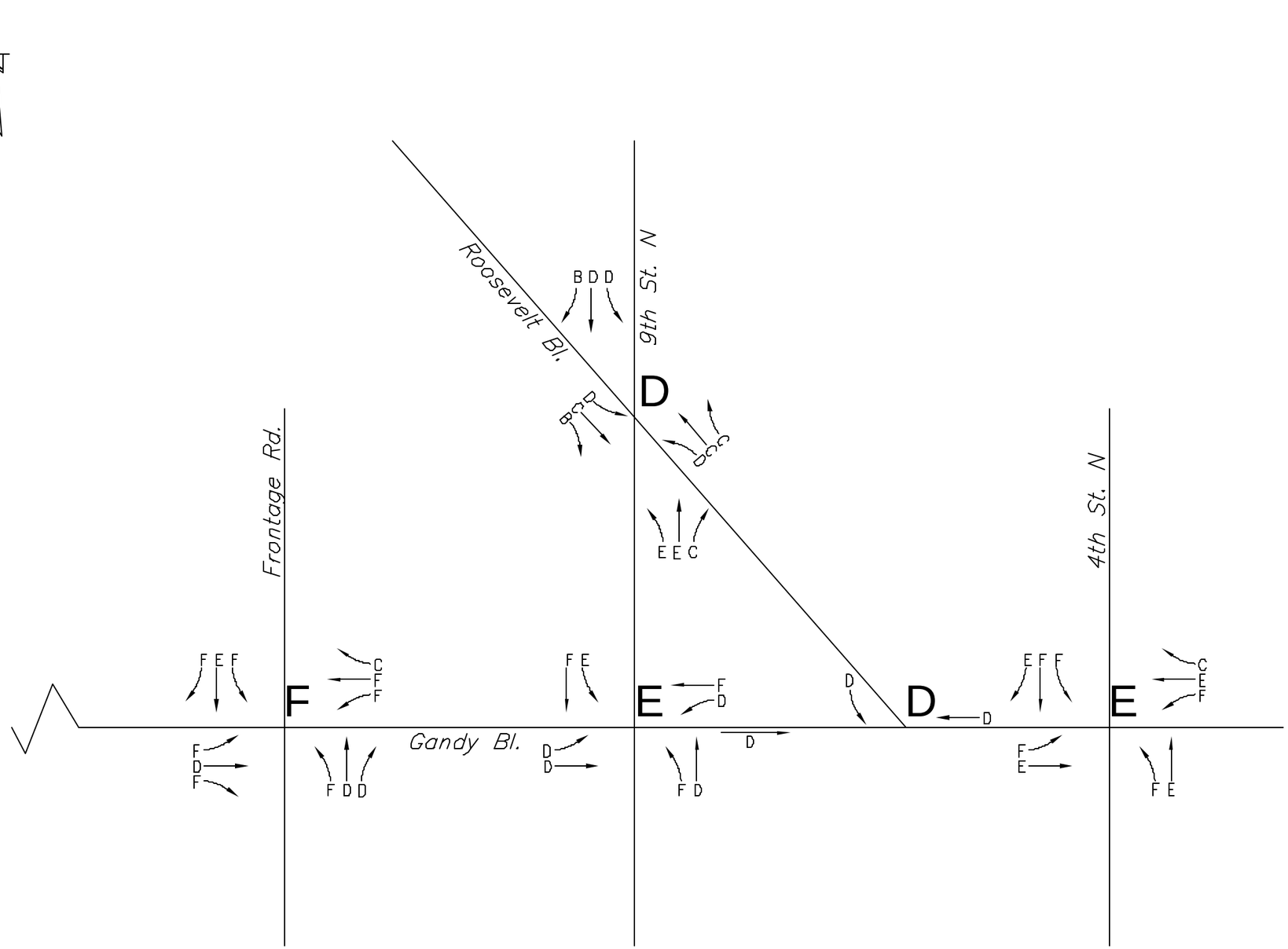

Florida Department of Transportation

SR 694 (Gandy Boulevard)

From US 19 to East of 4th Street
Pinellas County, Florida

Design Year (2025) PM Peak Hour Level of Service (Build-At Grade Alternative)

Plate B - Eastern Segment

LEGEND

D → Turning Movement Level of Service

D Overall Intersection Level of Service

Note: The intersection of Gandy Blvd and 9th St N. was analyzed as two separate intersections. The worst LOS is reported.

NOT TO SCALE

FPN#: 256931-1-32-01
DWG Date: January 12, 2001

Figure 3.17b

No-Build Alternative. Under the Build - At Grade Alternative, no intersection experiences a delay of longer than 120 seconds.

There are problems with certain movements under the Build - At Grade Alternative. The northbound, southbound, eastbound, and westbound left movements at Gandy Boulevard and US 19 all experience long delays in either the AM or PM peak hour. These delays are longest for the eastbound and northbound left during the PM peak hour where the delay is in excess of 250 seconds per vehicle. A delay of longer than 250 seconds per vehicle is also experienced by the southbound right movement at the intersection of Gandy Boulevard and Grand Avenue during the PM peak hour.

3.3.2.2 Operational Analyses for Roadway Segments

The results of the arterial analyses for the Build - At Grade Alternative indicate that the corridor as a whole operates at or better than LOS D in both the eastbound (LOS D) and westbound (LOS C) directions in the AM peak hour. However, during the PM peak hour the corridor fails to meet the LOS standard with a LOS of D for the eastbound direction and a LOS of F for the westbound direction. These results are displayed in **Table 3.4**. The full results of the arterial analyses for the Build - At Grade Alternative can be found in Appendix F.

3.3.3 Build - Structures Alternative

The Build – Structures Alternative involves the addition of new structures at US 19, Grand Avenue, Interstate 275, and Frontage Road as well as a structure extending from east of 4th Street North to west of 9th Street North. The proposed structure from east of 4th Street North to west of 9th Street North would not allow access to 4th Street North, Roosevelt Boulevard, or 9th Street North. For this reason, two one-way frontage roads would be necessary to allow access to these roads.

Table 3.4
Design Year (2025) AM and PM Peak Hour Level of Service-Roadway Segments (Build - At Grade Alternative)

Segment	AM LOS	PM LOS
WB Gandy Blvd		
4th St N to Roosevelt Blvd	F	F
Roosevelt Blvd to 9th St N	E	F
9th St N to Frontage Rd	E	F
Frontage Rd to I-275	C	F
I-275 to Grand Ave (28th St)	C	F
Overall Arterial LOS	**C**	**F**
EB Gandy Blvd		
US 19 to Grand Ave (28th St)	E	F
Grand Ave to I-275	C	B
I-275 to Frontage Rd	C	D
Frontage Rd to 9th St N	D	D
9th St N to Roosevelt Blvd	D	D
Roosevelt Blvd to 4th St N	F	F
Overall Arterial LOS	**D**	**D**

Under this alternative, Gandy Boulevard at Frontage road would be a single point urban interchange. The Interstate 275 northbound off ramp would no longer meet Gandy Boulevard at grade under this alternative. Either Gandy Boulevard or the ramp itself would be elevated where the two currently intersect. At the intersection of Gandy Boulevard and US 19, two structure scenarios were examined. In one scenario, a northbound left flyover as well as a southbound left flyover would be added. In the other scenario, a northbound left flyover and a southbound left loop ramp would be added. Two scenarios were also examined at the intersection of Gandy Boulevard and Grand Avenue. The first scenario involved a single point urban interchange, and the second involved a concept called the center-turning overpass. The intersection of Roosevelt Boulevard at 9th Street North would have only at grade improvements under this alternative. The intersection of Gandy Boulevard and the proposed southbound Interstate 275 to eastbound Gandy Boulevard off ramp was also assumed to be an at grade intersection in this alternative. The Build – Structures Alternative is suggested as a way to possibly improve the LOS along the corridor and, particularly at the intersection of Gandy Boulevard and 4th Street North, to reduce the number of traffic accidents. The lane configuration for the Build – Structures Alternative is presented in **Figure 3.18.**

The Build Alternative AM and PM peak hour traffic projections were used to determine the LOS under the Build – Structures Alternative. Synchro 5 software was used to optimize the signal timing and phasing.

3.3.3.1 Operational Analyses for Intersections and Ramps

The results of the LOS analyses for the design year (2025) Build - Structures Alternative indicate that most of the ramps in the corridor will operate at a satisfactory level of service under this alternative. The results of the analyses for both intersections and ramps for the Build - Structures Alternative are displayed in **Table 3.5** and depicted in **Figure 3.19** and **Figure 3.20**. The full results of these analyses can be found in Appendix F. The addition of elevated structures in this alternative created many new ramps, in addition to the existing ramps, which had to be analyzed. The vast majority of ramp merge and diverge areas operate at LOS D or better in both the AM and PM peak hour under this alternative. Only four ramp merge and diverge areas fail to meet this standard.

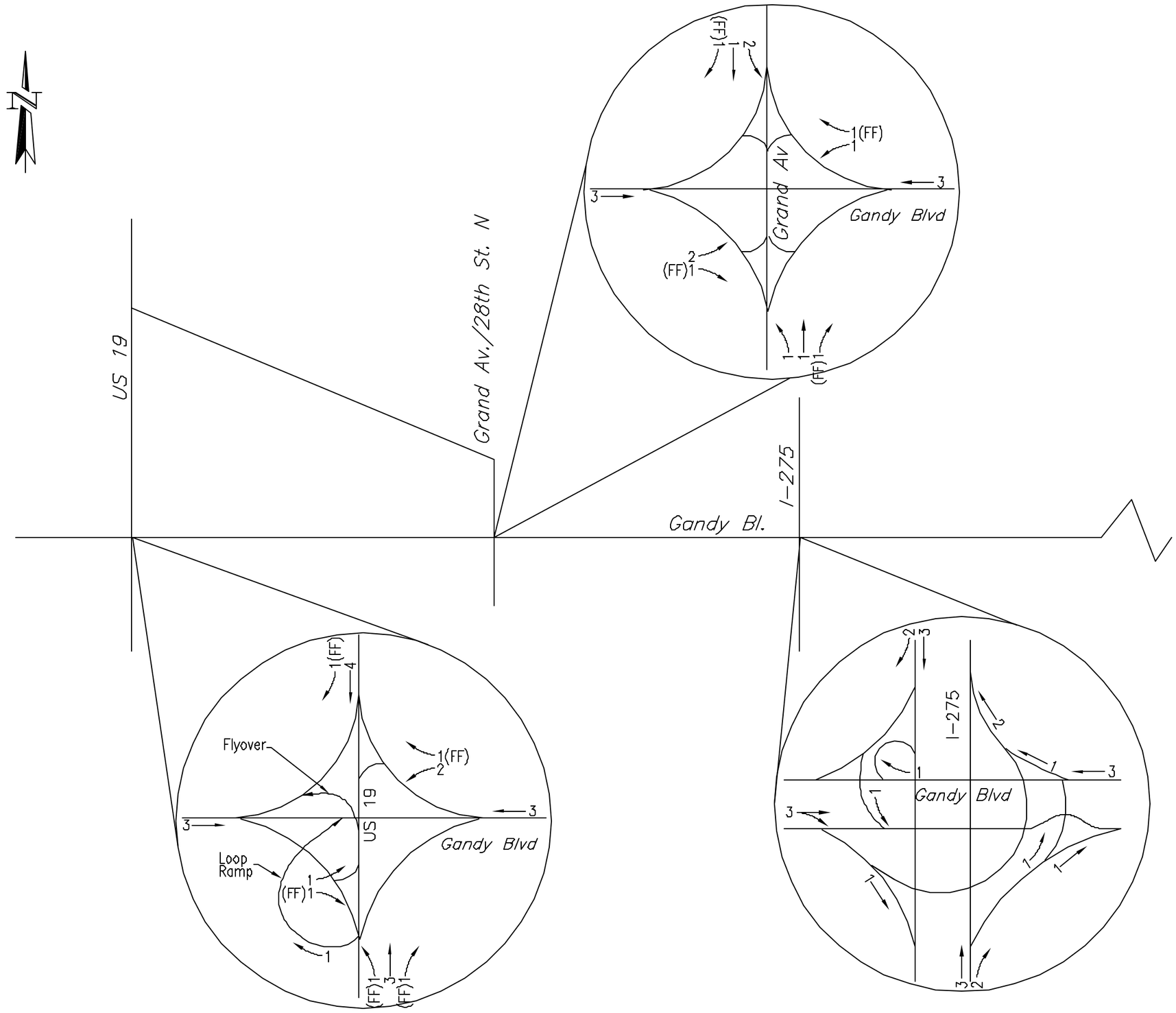

Florida Department of Transportation

SR 694 (Gandy Boulevard)

From US 19 to East of 4th Street
Pinellas County, Florida

Proposed Lane Configuration (Build-Structures Alternative)

Plate A - Western Segment

LEGEND

(FF) Free Flow Movement

3 ⟶ Number of lanes at intersection, on overpass, or on ramp

NOT TO SCALE

FPN#: 256931-1-32-01
DWG Date: January 12, 2001

Figure 3.18a

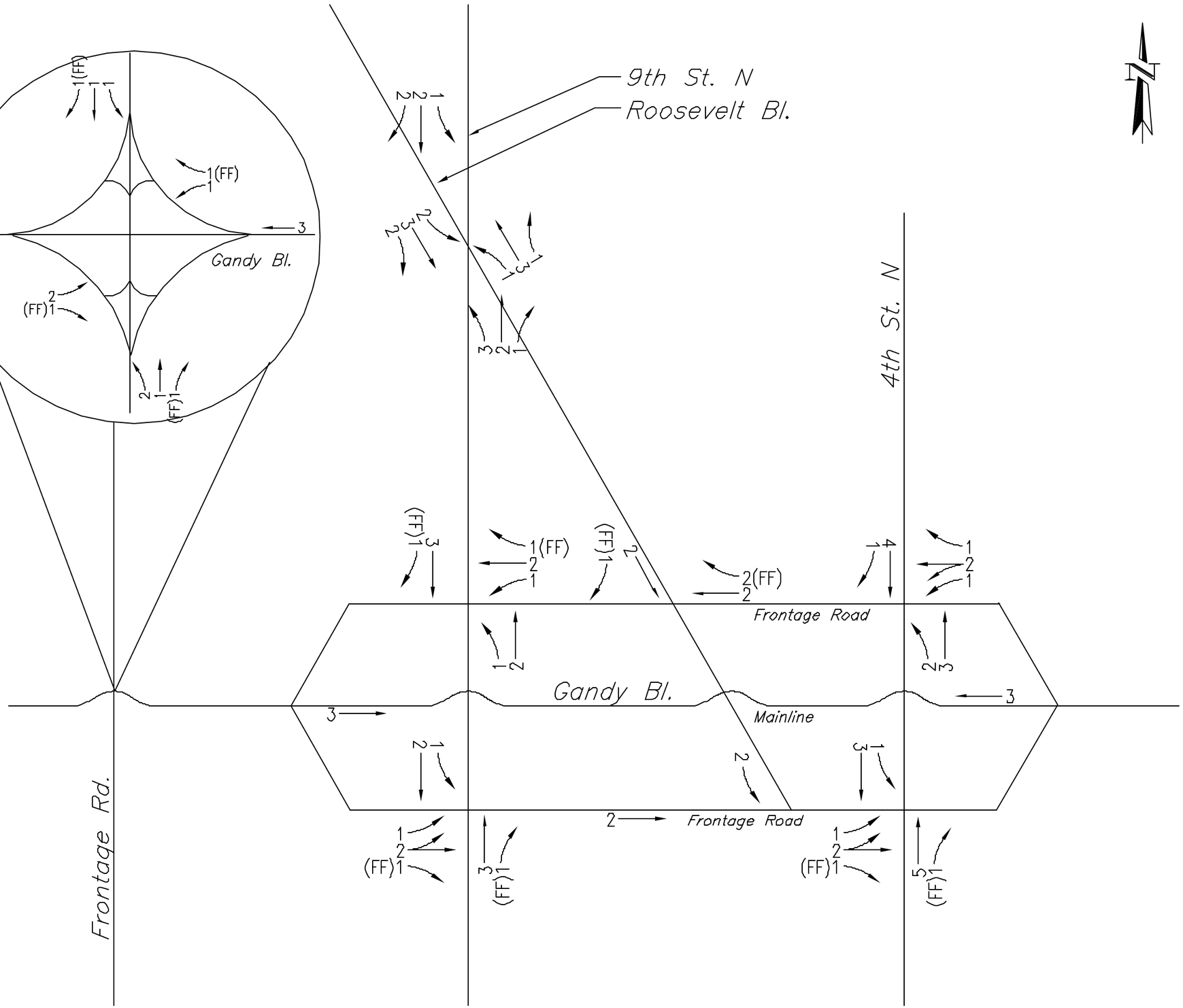

Florida Department of Transportation

SR 694 (Gandy Boulevard)

From US 19 to East of 4th Street
Pinellas County, Florida

Proposed Lane Configuration (Build-Structures Alternative)

Plate B - Eastern Segment

LEGEND

(FF) Free Flow Movement

3 → Number of lanes at intersection, on overpass, or on ramp

NOT TO SCALE

FPN#: 256931-1-32-01
DWG Date: February 12, 2002

Figure 3.18b

Table 3.5
Design Year (2025) AM and PM Peak Hour Level of Service-Intersections and Ramps (Build - Structures Alternative)

Location	AM LOS	PM LOS
Intersection		
Gandy Blvd @ US 19[a]	C	D
Gandy Blvd @ Grand Ave (28th St)[b]	C	C
Gandy Blvd @ I-275 SB Off Ramp	B	C
Gandy Blvd @ Frontage Rd	C	C
EB Gandy CD Road @ 9th St N	C	D
WB Gandy CD Road @ 9th St N	C	E
EB Gandy CD Road @ Roosevelt Blvd	B	B
WB Gandy CD Road @ Roosevelt Blvd	B	B
EB Gandy CD Road @ 4th St N	C	B
WB Gandy CD Road @ 4th St N	C	C
Roosevelt Blvd @ 9th St N	D	D
Ramp		
EB Gandy to I-275 Diverge	C	B
EB Gandy to NB I-275 Merge	B	A
EB Gandy to SB I-275 Merge	F	F
NB I-275 to Gandy Diverge	F	F
SB I-275 to WB Gandy Diverge	A	B
SB I-275 to WB Gandy Merge	B	C
WB Gandy to SB I-275 Diverge	C	C
WB Gandy to SB I-275 Merge	D	F
EB Gandy to US 19 Diverge	C	C
US 19 to EB Gandy Merge	C	B
US 19 to WB Gandy Merge	A	B
WB Gandy to US 19 Diverge	F	F
EB CD Road to EB Gandy Merge	B	B
EB Gandy to EB CD Road Diverge	C	B
WB CD Road to WB Gandy Merge	B	B
WB Gandy to WB CD Road Diverge	B	B
EB Gandy to Frontage Diverge	B	B
WB Gandy to Frontage Diverge	A	A
NB Frontage to Gandy Diverge	A	A
SB Frontage to Gandy Diverge	A	A
EB Gandy to SB Frontage Merge	A	A
WB Gandy to NB Frontage Merge	B	A
Frontage to EB Gandy Merge	B	B
Frontage to WB Gandy Merge	B	B
NB I-275 to WB Gandy Merge	C	D
SB US 19 to EB Gandy Diverge (Flyover)	C	D
SB US 19 to EB Gandy Diverge (Loop)	C	D
SB US 19 to EB Gandy Merge (Loop)	C	B
NB US 19 to WB Gandy Diverge (Flyover)	C	C

*** Notes**:

a. LOS for Gandy Blvd @ US 19 is for the build scenario involving a NB Left Flyover and SB Left Loop Ramp.
b. LOS for Gandy Blvd @ Grand Ave is for the build scenario involving a single point urban interchange.

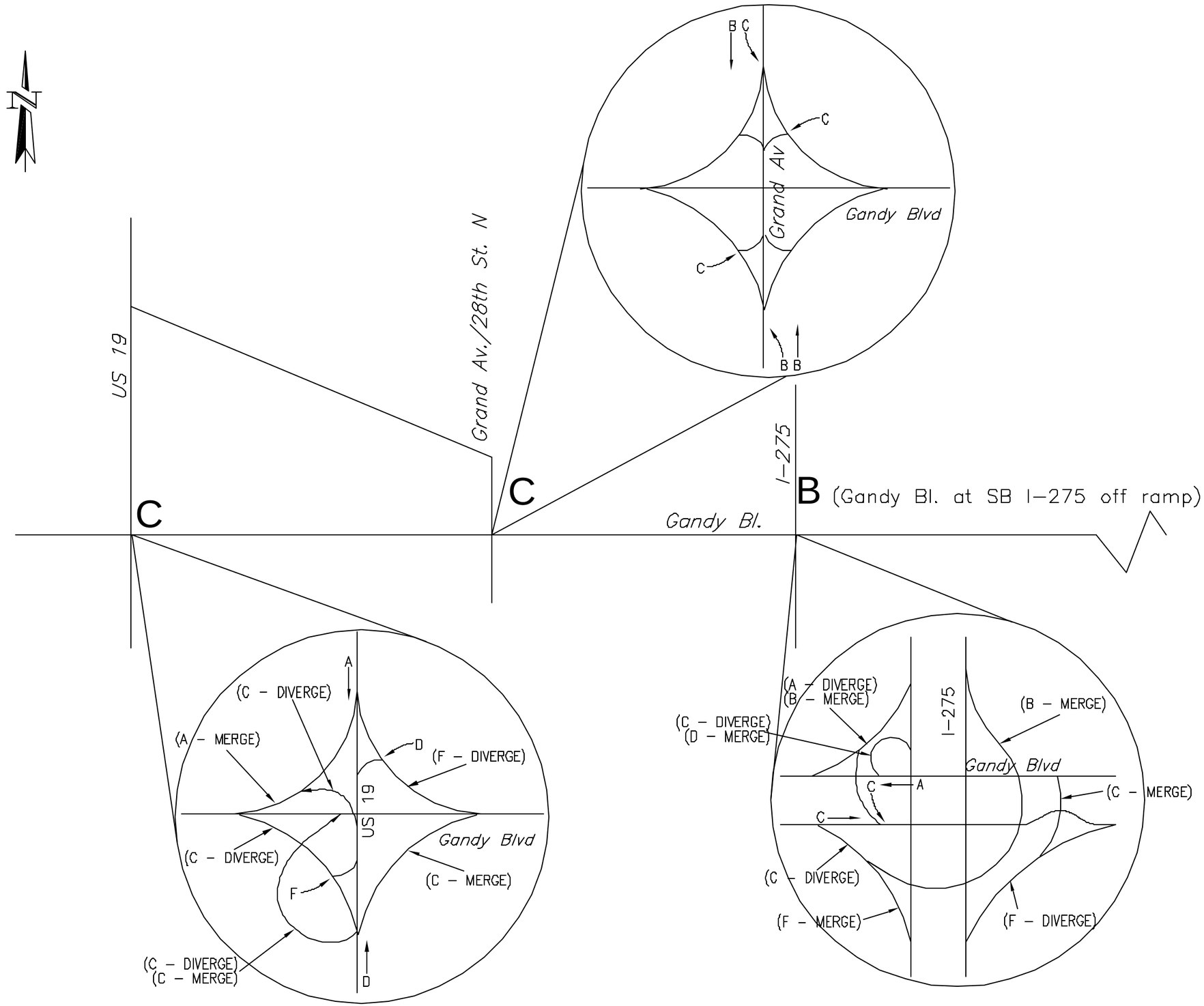

Florida Department of Transportation

SR 694 (Gandy Boulevard)

From US 19 to East of 4th Street
Pinellas County, Florida

Design Year (2025) AM Peak Hour Level of Service (Build-Structures Alternative)

Plate A - Western Segment

LEGEND

C →	Turning Movement Level of Service
C	Overall Intersection Level of Service
(C - DIVERGE)	Ramp Merge/Diverge Level of Service

Notes: The Level of Service for Gandy Blvd at US19 is for the build scenario involving a NB left flyover ramp and a SB left loop ramp.

The Level of Service for Gandy Blvd at Grand Ave. is for the build scenario involving a single point urban interchange.

NOT TO SCALE

FPN#: 256931-1-32-01
DWG Date: January 12, 2001

Figure 3.19a

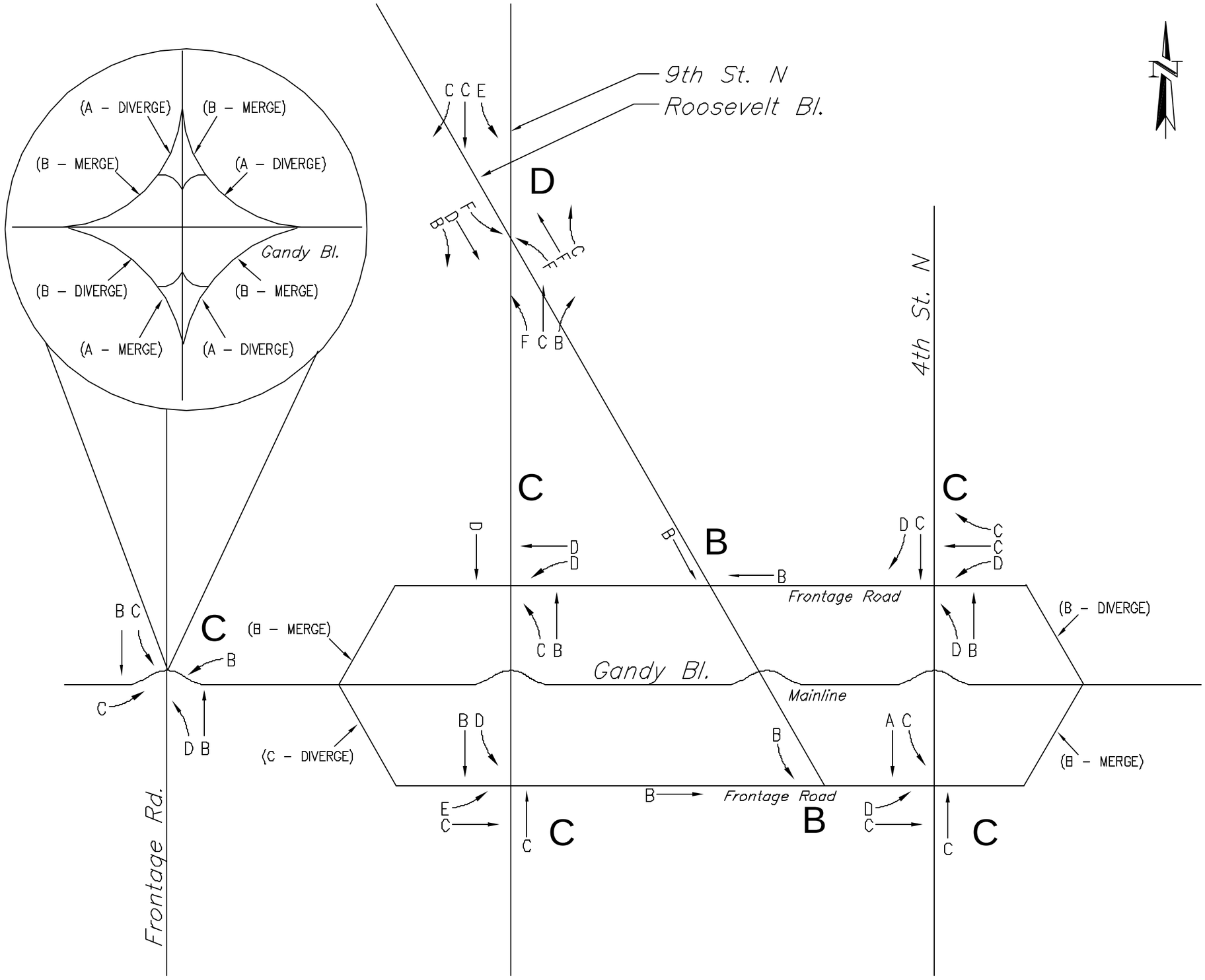

Florida Department of Transportation

SR 694 (Gandy Boulevard)

From US 19 to East of 4th Street
Pinellas County, Florida

Design Year (2025) AM Peak Hour Level of Service (Build-Structures Alternative)

Plate B - Eastern Segment

LEGEND

C →	Turning Movement Level of Service
B	Overall Intersection Level of Service
(B – DIVERGE)	Ramp Merge/Diverge Level of Service

NOT TO SCALE

FPN#: 256931-1-32-01
DWG Date: February 12, 2002

Figure 3.19b

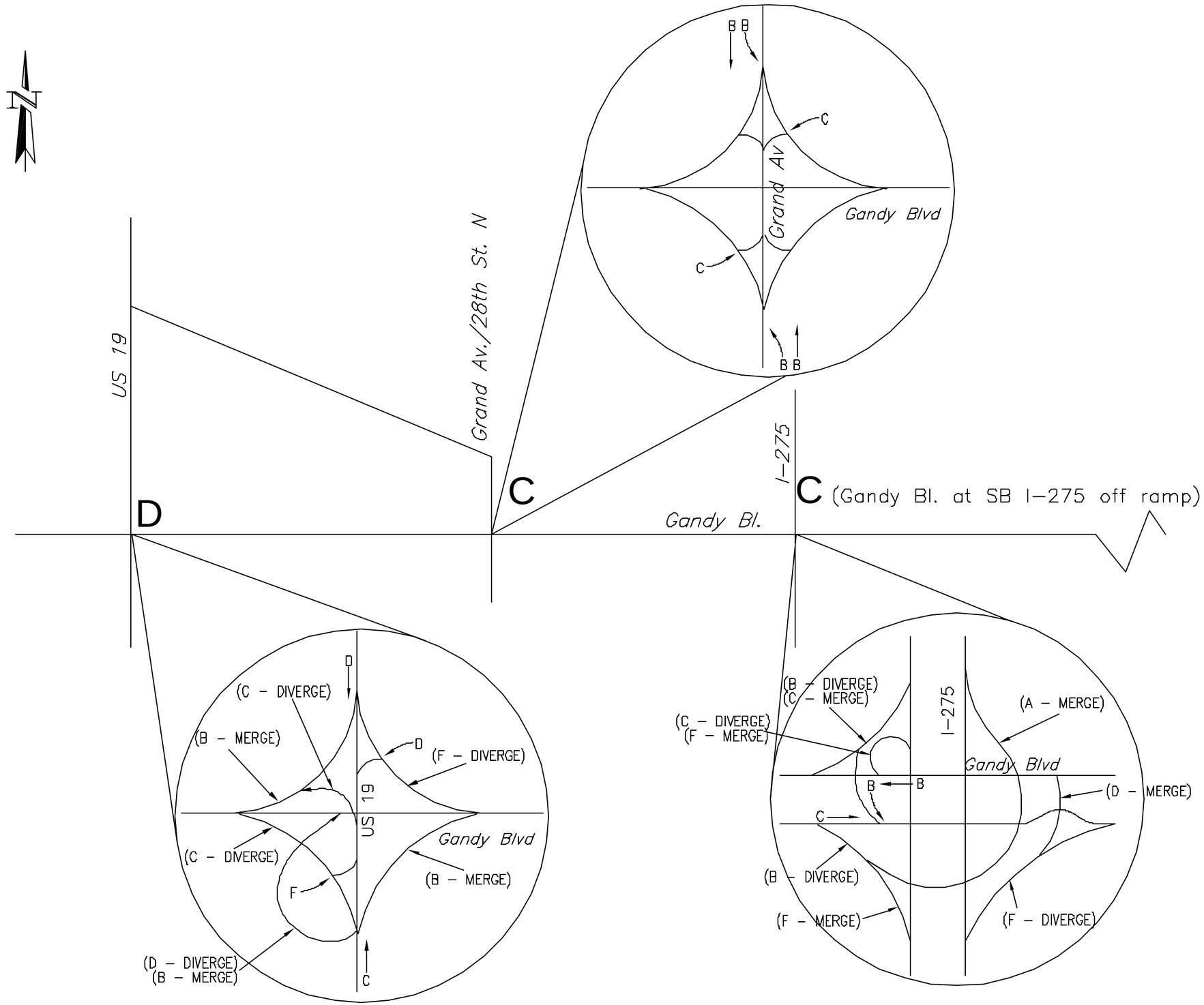

Florida Department of Transportation

SR 694 (Gandy Boulevard)

From US 19 to East of 4th Street
Pinellas County, Florida

Design Year (2025) PM Peak Hour Level of Service (Build-Structures Alternative)

Plate A - Western Segment

LEGEND

C →	Turning Movement Level of Service
D	Overall Intersection Level of Service
(B - DIVERGE)	Ramp Merge/Diverge Level of Service

Notes: The Level of Service for Gandy Blvd at US19 is for the build scenario involving a NB left flyover ramp and a SB left loop ramp.

The Level of Service for Gandy Blvd at Grand Ave. is for the build scenario involving a single point urban interchange.

NOT TO SCALE

FPN#: 256931-1-32-01
DWG Date: January 12, 2001

Figure 3.20a

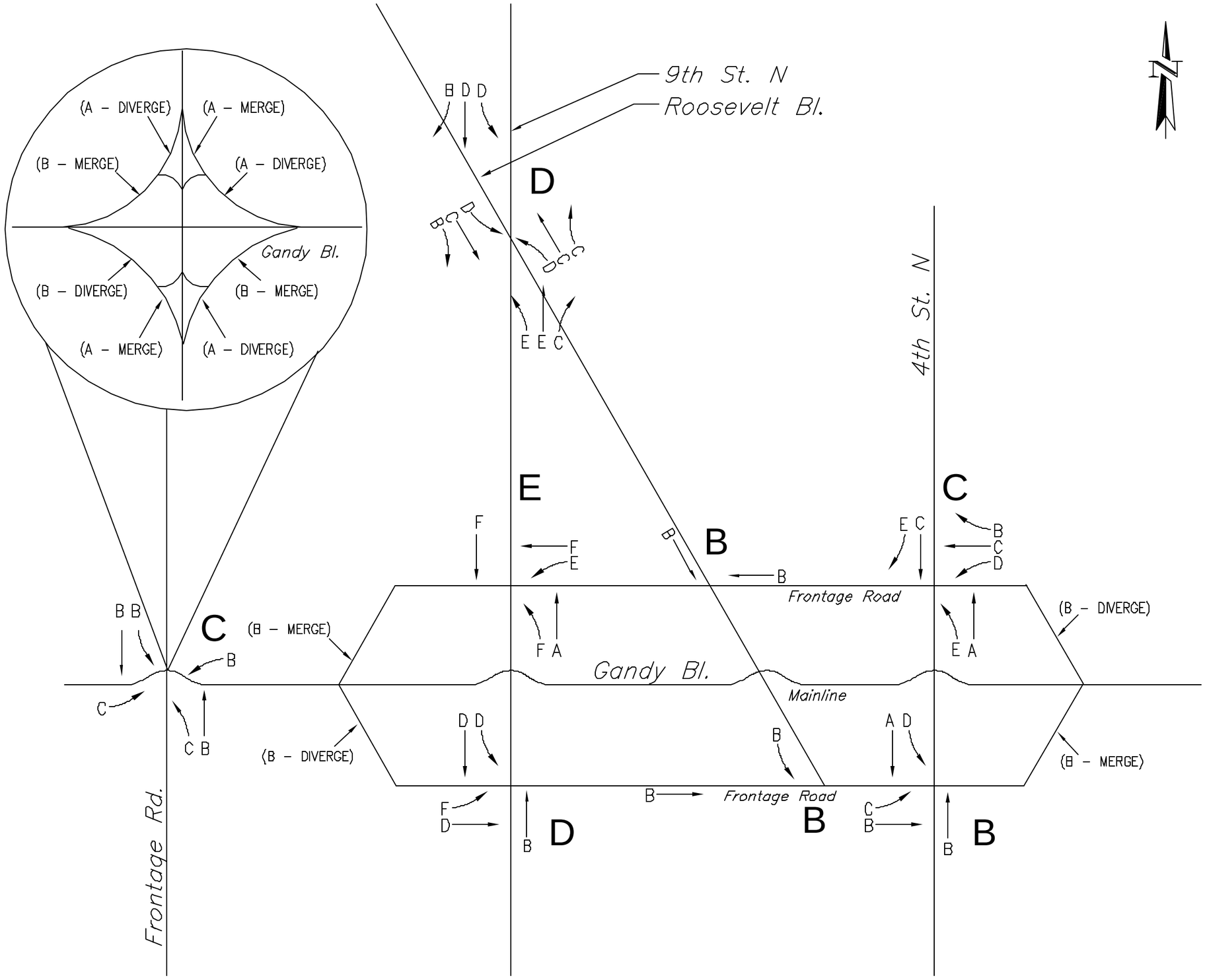

Florida Department of Transportation

SR 694 (Gandy Boulevard)

From US 19 to East of 4th Street
Pinellas County, Florida

Design Year (2025) PM Peak Hour Level of Service (Build-Structures Alternative)

Plate B - Eastern Segment

LEGEND

B →	Turning Movement Level of Service
B	Overall Intersection Level of Service
(B – DIVERGE)	Ramp Merge/Diverge Level of Service

NOT TO SCALE

FPN#: 256931-1-32-01
DWG Date: February 12, 2002

Figure 3.20b

The results of the HCS analyses for signalized intersections under the Build - Structures Alternative indicate that all intersections except for one meet or exceed the LOS D standard in both the AM and PM peak hour. The only intersection failing to meet the LOS D standard was the intersection of the westbound frontage road and 9th Street North which received a LOS of E for the PM peak hour. It should be noted that two structure scenarios were examined at the intersections of Gandy Boulevard at US 19 and Gandy Boulevard at Grand Avenue. The results that are presented in Table 3.5 and Figures 3.19 and 3.20 are for the structure scenario that produced the best LOS result at each intersection. The LOS results for the second scenario at each of these two intersections can be found in Appendix F.

3.3.3.2 Operational Analyses for Roadway Segments

The addition of elevated structures and the resulting removal of several signalized intersections along the Gandy Boulevard mainline, necessitated a change in the way in which roadway segments were analyzed. Without signalized intersections, the corridor could not be examined as a whole, but rather only in individual segments. These five segments, along with the corresponding level of service for each segment, are listed in **Table 3.6**. As this table indicates, three of the five segments meet or exceed LOS D in both the AM and PM peak hour in both the eastbound and westbound directions. Only the US 19 to Grand Avenue segment and the Grand Avenue to Interstate 275 segment fail to meet this standard. The full results of the roadway segment analyses for the Build - Structures Alternative can be found in Appendix F.

Table 3.6
Design Year (2025) AM and PM Peak Hour Level of Service-
Roadway Segments (Build - Structures Alternative)

Segment	AM LOS	PM LOS
WB Gandy Blvd		
4th St N to 9th St N	A	A
9th St N to Frontage Rd	B	B
Frontage Rd to I-275	B	C
I-275 to Grand Ave (28th St)	C	E
Grand Ave (28th St) to US 19	C	E
EB Gandy Blvd		
US 19 to Grand Ave (28th St)	E	C
Grand Ave to I-275	E	D
I-275 to Frontage Rd	D	C
Frontage Rd to 9th St N	C	B
9th St N to 4th St N	A	A

SECTION 4
INTERIM ANALYSIS

The previous section of this report described the analysis of study intersections for the design year (2025) for both the Build - At Grade alternative and the Build - Structures alternative. The results of these analyses indicated that some of the study intersections will not achieve the desired LOS D in 2025 under the Build - At Grade alternative and that structures will be needed to achieve the desired LOS D. This section presents an analysis of the years between the opening year (2005) and the design year (2025) to estimate, for each study intersection, the year at which the at grade improvements would no longer be effective. The results of this analysis will help guide decisions concerning whether at grade improvements or structures should be built at each intersection and will also help guide the staging of improvements along the study corridor.

In order to determine the year at which the at grade improvements fail, a definition of failure had to first be established. For this analysis, an intersection was deemed to be failing if the v/c ratio for any individual movement was greater than 1.0. At a v/c ratio of greater than 1.0, all cars in the queue do not clear the intersection during each cycle and the queue begins to grow larger. For this analysis, a v/c ratio between 1.00 and 1.03 was allowed in some cases in order to extend the useful life of the at grade improvements and to account for forecast uncertainties. Beyond this, however, an intersection was considered to be failing. Using this definition of failure, the results of the design year (2025) analyses for the Build - At Grade alternative were examined to determine which intersections failed using this criterion. Those intersections with a v/c ratio of 1.0 or less for all movements in 2025 were not further examined as at grade improvements were considered to be effective for the entire study period. However, those intersections not meeting this criterion were further analyzed to determine the failure year. The process used to identify the failure year is described below.

The first step in determining the failure year was to estimate AADTs for each intersection for each year from 2005 to 2025. In order to develop these AADT projections the opening year (2005) No-Build AADTs and the design year (2025) No-Build AADTs were examined. For each leg of each intersection, a compound growth rate for the 2005 to 2025 time period was calculated. Using the opening year (2005) No-Build AADTs as a starting point, this growth rate was then applied to estimate the AADTs for each interim year. The projected interim year AADTs for the intersections for which the interim analysis was performed can be found in **Appendix H**. Next, using the opening year (2005) estimated K_{30}, D_{30} and turn percentages, AM and PM peak hour volumes were estimated for all intersections for which the interim analysis was performed. The AM and PM estimated peak hour volumes for the interim analysis are presented in Appendix H.

After the peak-hour turning movements were estimated, HCS version 3.2 was used to analyze each intersection for various years to determine the last year at which the at grade improvements would be effective. Regardless of the year examined, the signal timing and phasing from the year 2025 Build - At Grade HCS analysis was used as a starting point. However, this signal timing and phasing was manually adjusted where doing so resulted in improved v/c ratios and thus extended the useful life of the at grade improvements. The results of these analyses are displayed **Table 4.1**. The full HCS results for the last year for which the at grade improvements were effective for each intersection can be found in Appendix H.

As Table 4.1 indicates, only four of the study intersections were examined for the interim analysis. No interim analysis was required for five of the intersections as previous analyses of the Build - At Grade alternative indicated that these intersections had acceptable v/c ratios in the design year (2025). In other words, the at grade improvements would be effective for the entire study period for these intersections. The intersection of Gandy Boulevard at US 19 also received no interim analysis. This is because any additional improvements to this intersection would be grade separated.

Table 4.1
Interim Analysis of At-Grade Improvements

Intersection	Year fails with at-grade improvements (2005-2025)
Gandy Blvd @ US 19	Not analyzed [a]
Gandy Blvd @ Grand Ave	2009
Gandy Blvd @ I-275 SB Off Ramp	Does not fail
Gandy Blvd @ I-275 NB Off Ramp	2010
Gandy Blvd @ Frontage Rd	2005
Gandy Blvd @ 9th St N	2020
Gandy Blvd @ Roosevelt Blvd	Does not fail
Gandy Blvd @ 4th St N	Does not fail
Roosevelt Blvd @ 9th St N	Does not fail

Notes:
[a] Gandy Blvd. @ US 19 was not analyzed because any additional improvements to this intersection would be grade separated.

Of the four remaining intersections, Gandy Boulevard at Frontage Road fails the earliest. The reported failure year is 2005, but this intersection may indeed fail earlier as 2005 was the earliest year for which this analysis was performed. This early failure date indicates that at grade improvements are not advisable here; only a structure will solve the problems at this intersection. Two other intersections that fail early are Gandy Boulevard at Grand Avenue and Gandy Boulevard at the I-275 northbound off ramp that fails in 2009 and 2010 respectively. The interim analysis indicates that at grade improvements will work fairly well along the segment of Gandy Boulevard from 4th Street North to 9th Street North. Only the intersection of Gandy Boulevard at 9th Street North fails during the study period, and it does not fail until 2020.

SECTION 5
TRAFFIC DATA FOR NOISE AND AIR STUDIES

Traffic data for both the noise and air studies that will be completed for the Gandy Boulevard PD&E Study are reported in various sections throughout this report. The purpose of this section is to document the specific traffic data for use in the noise and air studies. The following subsections summarize data for use in these studies.

5.1 Traffic Data for Air and Noise Studies

Traffic data are provided for all segments along the Gandy Boulevard study corridor. The detailed sheets necessary to support both air and noise analyses for all segments are included in **Appendix J**. The data contained in these worksheets came from various sources. **Table 5.1** lists the sources for each type of data contained in the worksheets.

Table 5.1
Sources for Traffic Data (for Noise Study)

Traffic Data	Source
AADT Volume at LOS C	FDOT 1998 Level of Service Handbook, Table 5-4 Generalized Annual Average Daily Volumes For Florida's Urbanized Areas, State Two-Way Arterials, Interrupted Flow Class 1 and Uninterrupted Flow (copy provided in Appendix J)
Demand (# of vehicles counted or projected)	Existing (2000) volumes, Design Year No-Build volumes, and Design Year Build volumes are depicted on Figure J.1, Figure J.2, and Figure J.3 respectively. The process used to develop these numbers are explained in Sections 2.1.2, 3.2.2.1, and 3.2.2.2 respectively.
Posted Speed	FDOT District 7
Trafffic Characteristics (K-,D-,T-factors)	Table 2.2 Design Traffic Factors Comparison and Recommendations - See Section 2.1.4 for an explaination of how these factors were developed.

SECTION 6

SUMMARY AND RECOMMENDATIONS OF PREFERRED ALTERNATIVE

The SR 694 (Gandy Boulevard) corridor is a major east/west corridor serving central and southern Pinellas County, Florida. Residents of St. Petersburg, Pinellas Park, Gateway and the Pinellas Beaches are all users of the roadway. The roadway also serves as a major hurricane evacuation route. Commuters in the corridor have destinations in Tampa, St. Petersburg and Gateway Center.

Congestion in the corridor is very pronounced in both the AM and PM peak period. Of the nine intersections studied, only one is currently operating at the LOS standard of D or better in both the AM and PM peak hour. Arterial analysis of the corridor also reveals that when examined as a whole, the segment of Gandy Boulevard from US 19 to 4th Street North meets or exceeds the acceptable LOS D only in the PM eastbound direction. Tight signal spacing near 4th Street, combined with significant traffic volumes, currently results in long delays and a large number of traffic accidents. Furthermore, development continues in the Gateway area. For these reasons, the City of St. Petersburg, local residents/businesses and FDOT have identified SR 694 as a regionally significant corridor in need of improvement.

Three major types of alternatives for improving this corridor were examined for the design year (2025). These included a No-Build Alternative, a Build - At Grade Alternative, and a Build - Structures Alternative. Analysis of the No-Build Alternative revealed that every signalized intersection in the corridor except for one will operate at LOS F in 2025. Many of the ramp merge and diverge areas will also begin to fail. Arterial analysis of this alternative indicated that the corridor as a whole will operate at LOS F in both the eastbound and westbound directions in both the AM and PM peak hour under this alternative.

The two build alternatives yielded improvements in the level of service for the corridor. Under the Build - At Grade Alternative most of the ramp merge and diverge areas will operate at a

satisfactory level of service in 2025. The signalized intersections do show improvements in level of service under this alternative, but six of the study intersections still fail to meet the LOS D standard for the AM peak hour, the PM peak hour, or both peak hours. Arterial analyses revealed an improvement with the corridor as a whole meeting the LOS D standard in both the eastbound and westbound directions in the AM peak hour, but failing to do so in the PM peak hour.

The most significant improvement in level of service was produced by the Build - Structures Alternative. Under this alternative, the vast majority of ramp merge and diverge areas will operate at or better than the LOS D standard in 2025. The results of the HCS analyses for signalized intersections indicate that all intersections except for one meet the LOS D standard in both the AM and PM peak hour in 2025 under the Build - Structures Alternative. Analysis of the roadway segments revealed that three of the five roadway segments analyzed meet or exceed the LOS D standard in both the AM and PM peak hour.

Interim analysis was also performed in order to determine how long the at grade improvements would be effective at each intersection. This analysis revealed that at grade improvements would be effective throughout the entire study period for some of the study intersections. However, at grade improvements would fail at some point during the study period for four of the intersections. This analysis was not performed for the intersection of Gandy Boulevard and US 19 as any improvements to this intersection would be grade separated.

The final (preferred) alternative for the corridor reflects a maximum buildout condition. Shown in **Figure 6.1** and **Figure 6.2**, the preferred alternative includes structures throughout the corridor and also includes a frontage road system. To evaluate the operation of the preferred alternative, 2025 forecast traffic was simulated using FHWA's TSIS software package. The CORSIM analysis package included in TSIS includes both FRESIM and NETSIM. These software packages are used to microsimulate traffic conditions and to identify any potential capacity issues both in summary tables and in real time simulation mode.

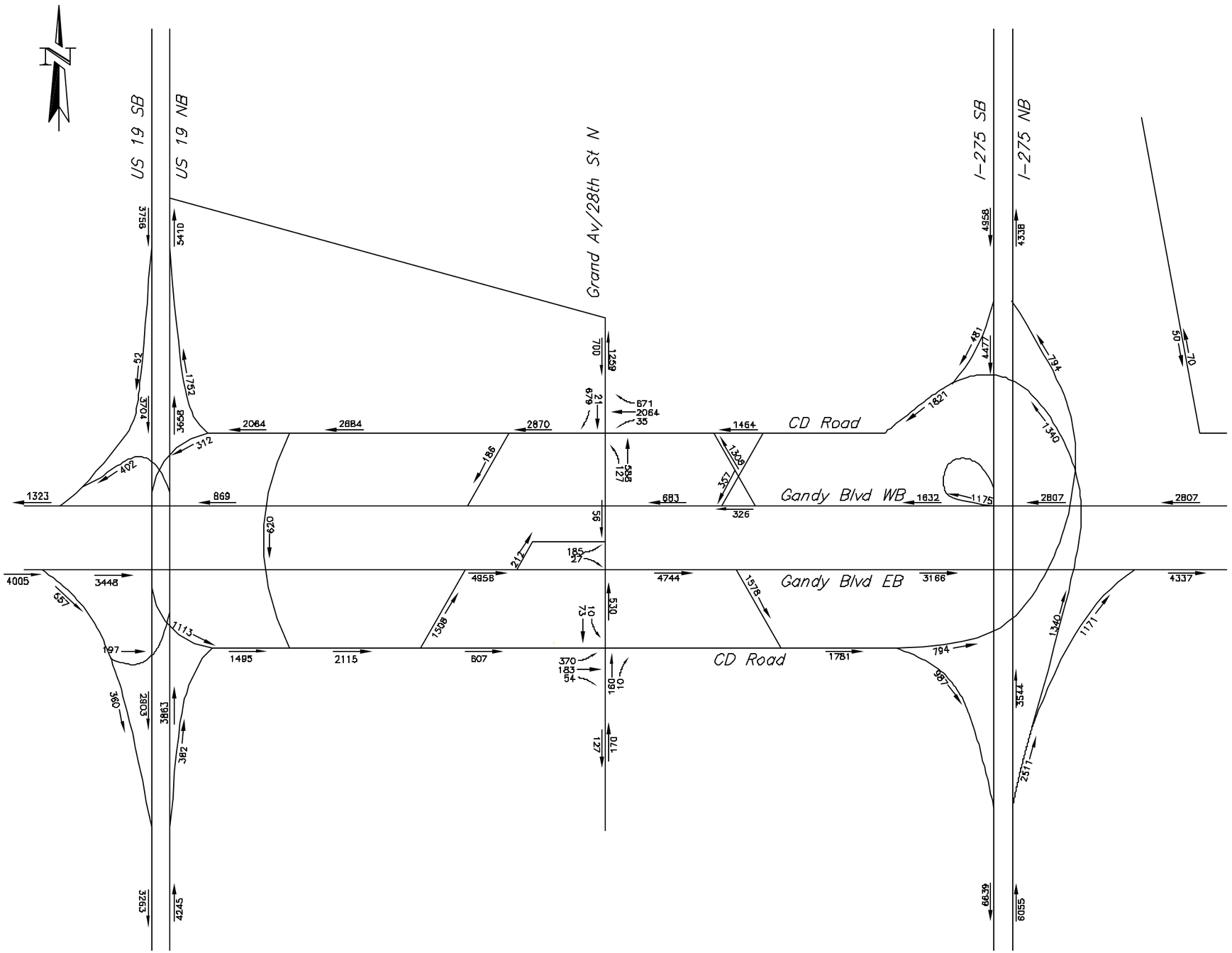

Florida Department of Transportation

SR 694 (Gandy Boulevard)

From US 19 to East of 4th Street
Pinellas County, Florida

Design Year (2025) AM Peak Hour Volumes (Preferred Alternative)

Plate A - Western Segment

NOT TO SCALE

FPN#: 256931-1-32-01
DWG Date: January 12, 2001
REV Date: May 14, 2002

Figure 6.1a

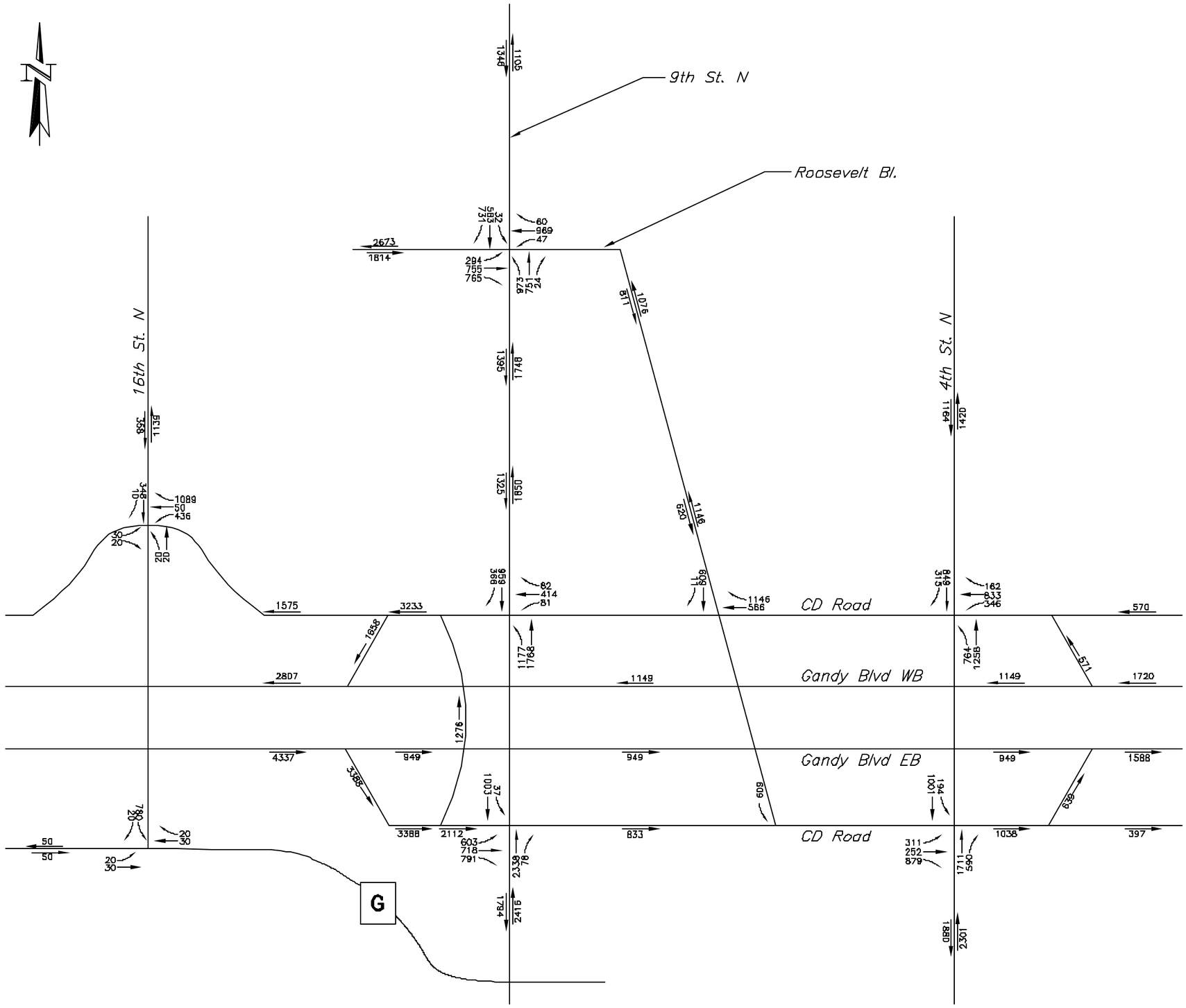

Florida Department of Transportation

SR 694 (Gandy Boulevard)

From US 19 to East of 4th Street
Pinellas County, Florida

Design Year (2025) AM Peak Hour Volumes (Preferred Alternative)

Plate B - Eastern Segment

LEGEND

G - Trip Generator

NOT TO SCALE

FPN#: 256931-1-32-01
DWG Date: January 12, 2001
REV Date: May 14, 2002

Figure 6.1b

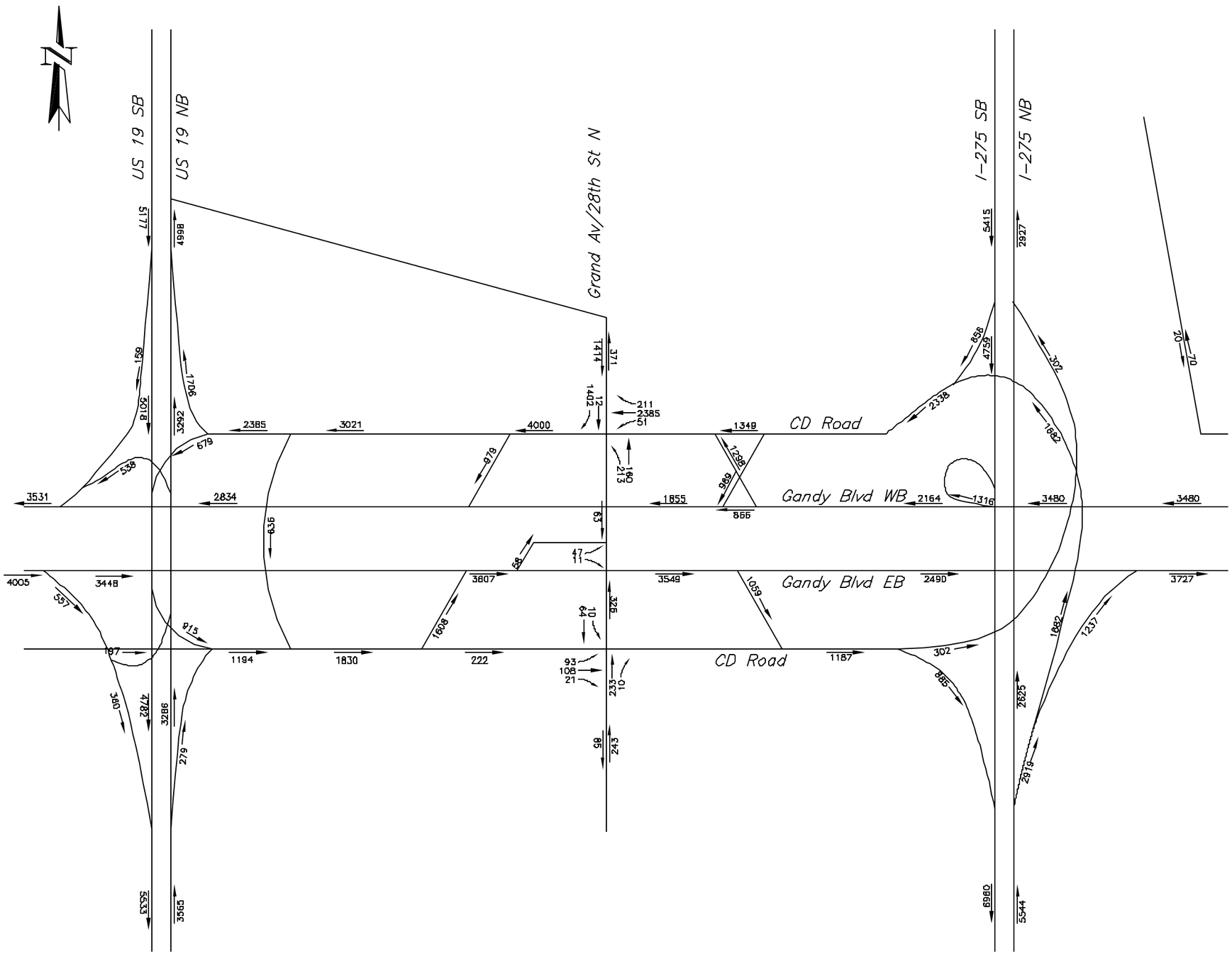

Florida Department of Transportation

SR 694 (Gandy Boulevard)

From US 19 to East of 4th Street
Pinellas County, Florida

Design Year (2025) PM Peak Hour Volumes (Preferred Alternative)

Plate A - Western Segment

NOT TO SCALE

FPN#: 256931-1-32-01
DWG Date: January 12, 2001
REV Date: May 14, 2002

Figure 6.2a

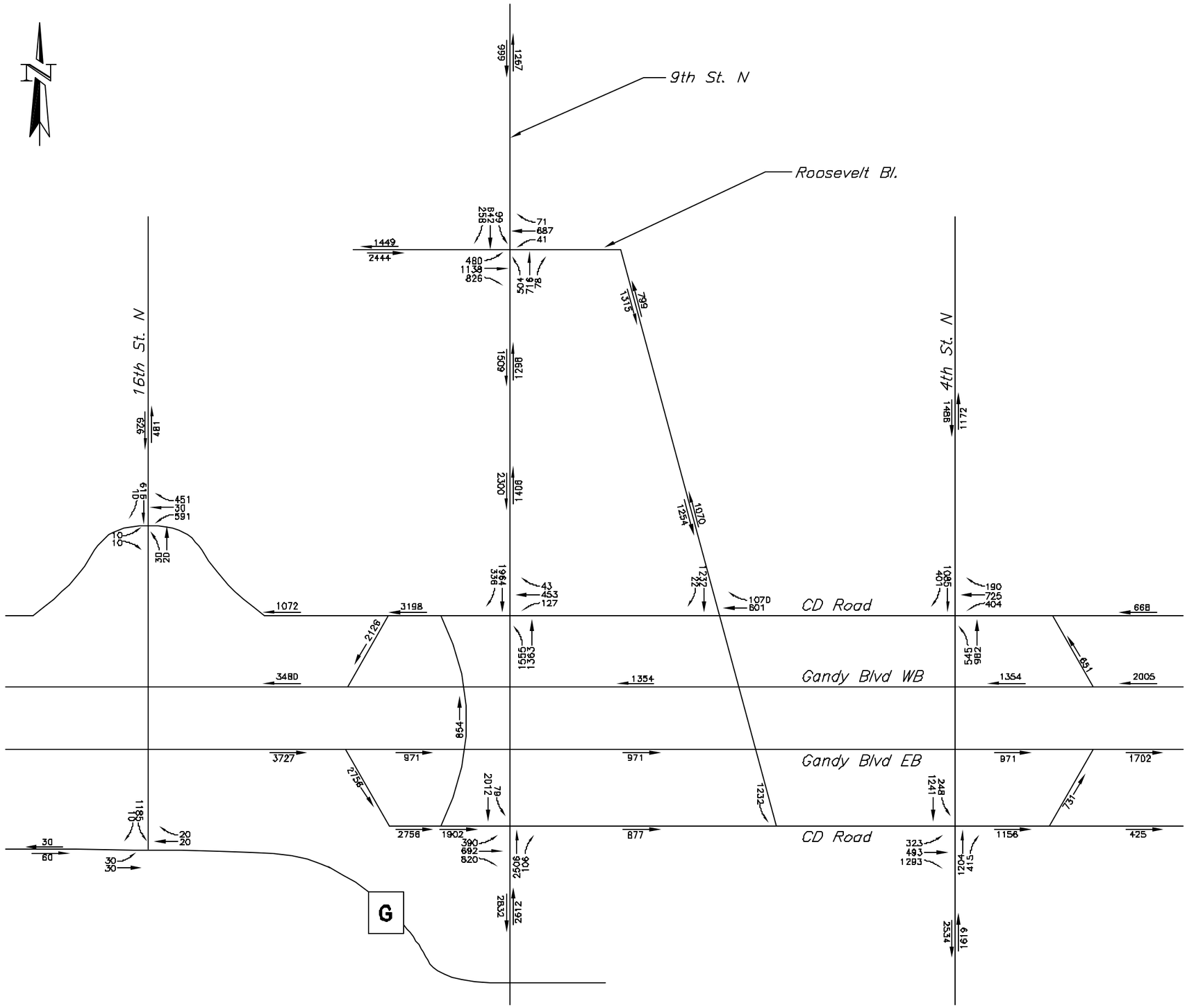

Florida Department of Transportation

SR 694 (Gandy Boulevard)

From US 19 to East of 4th Street
Pinellas County, Florida

Design Year (2025) PM Peak Hour Volumes (Preferred Alternative)

Plate B - Eastern Segment

LEGEND

G - Trip Generator

NOT TO SCALE

FPN#: 256931-1-32-01
DWG Date: January 12, 2001
REV Date: May 14, 2002

Figure 6.2b

Using CORSIM as an additional tool to evaluate traffic conditions allows for detailed intersection and queuing analysis to be performed. Summarized in **Table 6.1, Table 6.2** and **Table 6.3** are the intersection level-of-service and queue analysis results from the CORSIM package. Generally speaking, the mainline of Gandy Boulevard works well. However, as shown in **Figure 6.3a&b** and **Figure 6.4a&b,** CORSIM does predict some congestion at some ramp locations where high-volumes of exiting traffic conflicts with movements on side streets. Queues reported from CORSIM are the maximum queue by number of vehicles in the queue. The longest queues in the corridor occur on US 19 in the forecast. That result is consistent with existing conditions and is not expected to change without improvements to US 19 that are outside of this study's purview. The mainline of Gandy Boulevard does not sustain any significant queues. The recommended lane geometry and interchanges for the Gandy Boulevard (SR 694) is reflected in **Figure 6.5a&b**.

Table 6.1 Preferred Alternative CORSIM Intersection Analysis Results

		AM Peak				PM Peak			
Intersection	Approaches	Delay (sec/veh)	Veh Trips	Vol * Delay	LOS	Delay (sec/veh)	Veh Trips	Vol * Delay	LOS
100, 1) US 19&GANDY BLVD	EB	171.0	173	29583	F	108.0	267	28836	F
103, 1)	WB	63.8	268	17098	E	484.0	63	30395	E
101, 1)	SB	38.4	2107	80909	D	31.9	3279	104600	F
108, 1)	NB	43.9	3123	137100	D	1970.0	42	82740	F
	OVERALL	**46.7**	**5671**	**264690**	**D**	**67.5**	**3651**	**246571**	**E**
28, 149) GANDY OFF-RAMP & GRAND AVE	EB	20.5	174	3567	C	14.1	50	16	B
53, 149)	NB	15.5	403	6247	B	5.1	327	6	A
51, 149)	SB	7.4	358	2649	A	13.6	303	4121	B
	OVERALL	**13.3**	**935**	**12463**	**B**	**6.1**	**680**	**4143**	**A**
12, 153) EB FRONTAGE RD & GRAND AVE	EB	8.9	386	3435	A	9.0	189	416	B
45, 153)	NB	7.1	179	1271	A	7.8	255	1989	A
49, 153)	SB	15.7	383	6013	B	13.0	312	4056	B
	OVERALL	**11.3**	**948**	**10719**	**B**	**8.5**	**756**	**6461**	**A**
55, 151) WB FRONTAGE RD & GRAND AVE	SB	25.9	729	18881	C	108.5	1383	150056	F
49, 151)	NB	28.9	554	16011	C	26.7	368	9826	C
52, 151)	WB	18.9	2376	44906	B	69.0	1950	134550	E
	OVERALL	**21.8**	**3659**	**79798**	**C**	**79.6**	**3701**	**294431**	**E**
25, 10) 16TH ST& WB GANDY BLVD C-D RD	SB	46.8	377	17644	D	173.7	578	100399	F
24, 10)	WB	173.1	819	141769	F	55.3	475	26268	E
77, 10)	EB	33.2	53	1760	C	25.4	20	508	C
33, 10)	NB	3.7	49	182	A	14.4	52	749	B
	OVERALL	**124.3**	**1298**	**161354**	**F**	**113.7**	**1125**	**127923**	**F**
93, 33) 16TH ST& EB GANDY BLVD C-D RD	EB	8.4	53	445	A	16.6	62	1029	B
83, 33)	WB	8.0	53	424	A	5.1	42	214	A
10, 33)	SB	19.2	392	7526	B	18.2	584	10629	B
	OVERALL	**16.9**	**498**	**8396**	**B**	**17.3**	**688**	**11872**	**B**
84, 6) 9TH ST&WB GANDY BLVD C-D RD	SB	53.1	915	48587	D	34.7	1046	36296	C
61, 6)	WB	57.3	487	27905	E	66.8	590	39412	E
7, 6)	NB	39.4	2675	105395	D	58.9	2057	121157	E
	OVERALL	**44.6**	**4077**	**181887**	**D**	**53.3**	**3693**	**196866**	**D**
6, 7) 9TH ST&EB GANDY BLVD C-D RD	SB	18.8	1008	18950	B	20.6	1191	24535	C
49, 7)	EB	44.1	1052	46393	D	65.1	726	47263	E
38, 7)	NB	31.6	2210	69836	C	39.4	1914	75412	D
	OVERALL	**31.7**	**4270**	**135180**	**C**	**38.4**	**3831**	**147209**	**D**
87, 8) ROOSEVELT BLVD&WB GANDY BLVD	WB	6.9	592	4085	A	12.7	609	7734	B
28, 8)	SB	17.4	677	11780	B	11.5	946	10879	B
	OVERALL	**12.5**	**1269**	**15865**	**B**	**12.0**	**1555**	**18613**	**B**
8, 9) ROOSEVELT BLVD&EB GANDY BLVD C	SB	8.7	682	5933	A	6.6	948	6257	A
35, 9)	EB	12.6	670	8442	B	18.9	687	12984	B
	OVERALL	**10.6**	**1352**	**14375**	**B**	**11.8**	**1635**	**19241**	**B**
25, 125) 4TH ST&WB GANDY BLVD C-D RD.	WB	20.3	1186	24076	C	17.4	1364	23734	B
11, 125)	SB	18.7	1224	22889	B	17.9	1552	27781	B
13, 125)	NB	10.0	2083	20830	A	8.8	1538	13534	A
	OVERALL	**15.1**	**4493**	**67795**	**B**	**14.6**	**4454**	**65049**	**B**
25, 113) 4TH ST&EB GANDY BLVD C-D RD.	SB	9.0	1240	11160	A	8.3	1541	12790	A
94, 113)	NB	14.3	1805	25812	B	14.7	1261	18537	B
95, 113)	EB	14.8	540	7992	B	16.4	661	10840	B
	OVERALL	**12.5**	**3585**	**44964**	**B**	**12.2**	**3463**	**42167**	**B**
17, 12) 9TH ST & ROOSEVELT BLVD	EB	251.2	1547	388606	F	271.9	1717	466852	F
88, 12)	WB	189.7	1066	202220	F	136.0	1014	137904	F
48, 12)	NB	57.9	1663	96288	E	38.1	1041	39662	D
20, 12)	SB	94.3	1420	133906	F	33.5	1053	35276	C
	OVERALL	**144.1**	**5696**	**821020**	**F**	**140.9**	**4825**	**679694**	**F**

Table 6.2 Design Year (2025) Signalized Intersections LOS of Preferred Build Alternative

Signalized Intersection	**Build (2025) Peak Hour**	
	AM	**PM**
Gandy Boulevard (SR 694) at US 19	D	E
Westbound Gandy Boulevard (SR 694) slip ramp at Grand Avenue (28th Street)	B	A
Eastbound frontage road at Grand Avenue (28th Street)	B	A
Westbound frontage road at Grand Avenue (28th Street)	C	E
Eastbound frontage road at 16th Street N	B	B
Westbound frontage road at 16th Street N	F	F
Eastbound frontage road at 9th Street N	C*	D*
Westbound frontage road at 9th Street N	D*	D*
Eastbound frontage road at Roosevelt Boulevard	B	B
Westbound frontage road at Roosevelt Boulevard	B	B
Eastbound frontage road at 4th Street N	B	B
Westbound frontage road at 4th Street N	B	B
Roosevelt Boulevard at 9th Street N	F	F

Note: *Further review revealed that CORSIM was under reporting the delay of the intersections due to the short distance. Therefore, HCS was used to evaluate these intersections. Based on the HCS analyses, the intersections are expected to operate at LOS F during the AM and PM peak hours.

Table 6.3. Preferred Alternative CORSIM Queue Analysis Results

AM Peak — **Maximum Queue in Number of Vehicles**

Intersection	Southbound			Westbound			Northbound			Eastbound		
	LT	TH	RT	LT	TH	RT	LT	TH	RT	LT	TH	RT
US 19&GANDY BLVD	40	71	0	9		10	23	63	5	10		4
GRAND AVE & WB GANDY CD ROAD		7	5		26	7	2	5				
GRAND AVE & EB GANDY OFF-RAMP		4						6		7		
GRAND AVE & EB GANDY CD ROAD	0	5						2		1	1	
16TH ST&GANDY BLVD & WB GANDY CD ROAD		13		27	29		2	2		2		
16TH ST&GANDY BLVD & EB GANDY CD ROAD	12		1		1	1				1	1	
9TH ST & WB GANDY CD ROAD		8		0	10		22	20				
9TH ST & EB GANDY CD ROAD	11	16						11		13	13	
ROOSEVELT BLVD & WB GANDY CD ROAD		8			4							
ROOSEVELT BLVD & EB GANDY CD ROAD	4										11	
4TH ST & WB GANDY CD ROAD		5	9	8	8	3	10	6				
4th ST & EB GANDY CD ROAD	6	5						9		8	4	
9TH ST & ROOSEVELT BLVD	4	13	52	4	70	4	22	27	18	17	60	58

PM Peak — **Maximum Queue in Number of Vehicles**

Intersection	Southbound			Westbound			Northbound			Eastbound		
	LT	TH	RT	LT	TH	RT	LT	TH	RT	LT	TH	RT
US 19&GANDY BLVD	41	77	1	9		5	23	62	0	10		4
GRAND AVE & WB GANDY CD ROAD		35	12		33	3	2	5				
GRAND AVE & EB GANDY OFF-RAMP		5						3		2		
GRAND AVE & EB GANDY CD ROAD	0	6						2		1	1	
16TH ST&GANDY BLVD & WB GANDY CD ROAD		43		1	21		2	1		1		
16TH ST&GANDY BLVD & EB GANDY CD ROAD	13		1		1	1				1	1	
9TH ST & WB GANDY CD ROAD		8		0	10		22	20				
9TH ST & EB GANDY CD ROAD	11	19						11		12	13	
ROOSEVELT BLVD & WB GANDY CD ROAD		8			6							
ROOSEVELT BLVD & EB GANDY CD ROAD	5										13	
4TH ST & WB GANDY CD ROAD		6	8	8	8	4	8	4				
4th ST & EB GANDY CD ROAD	6	4						5		9	7	
9TH ST & ROOSEVELT BLVD	5	12	6	6	42	3	9	14	13	27	60	57

*Traffic flow exceeds capacity in certain segment, therefore, some of queue may not be included in the summary (Shown as spillback).
**This approximate queue analysis are based on CORSIM statistics and simulation observation.

Spillback
Not Applicable

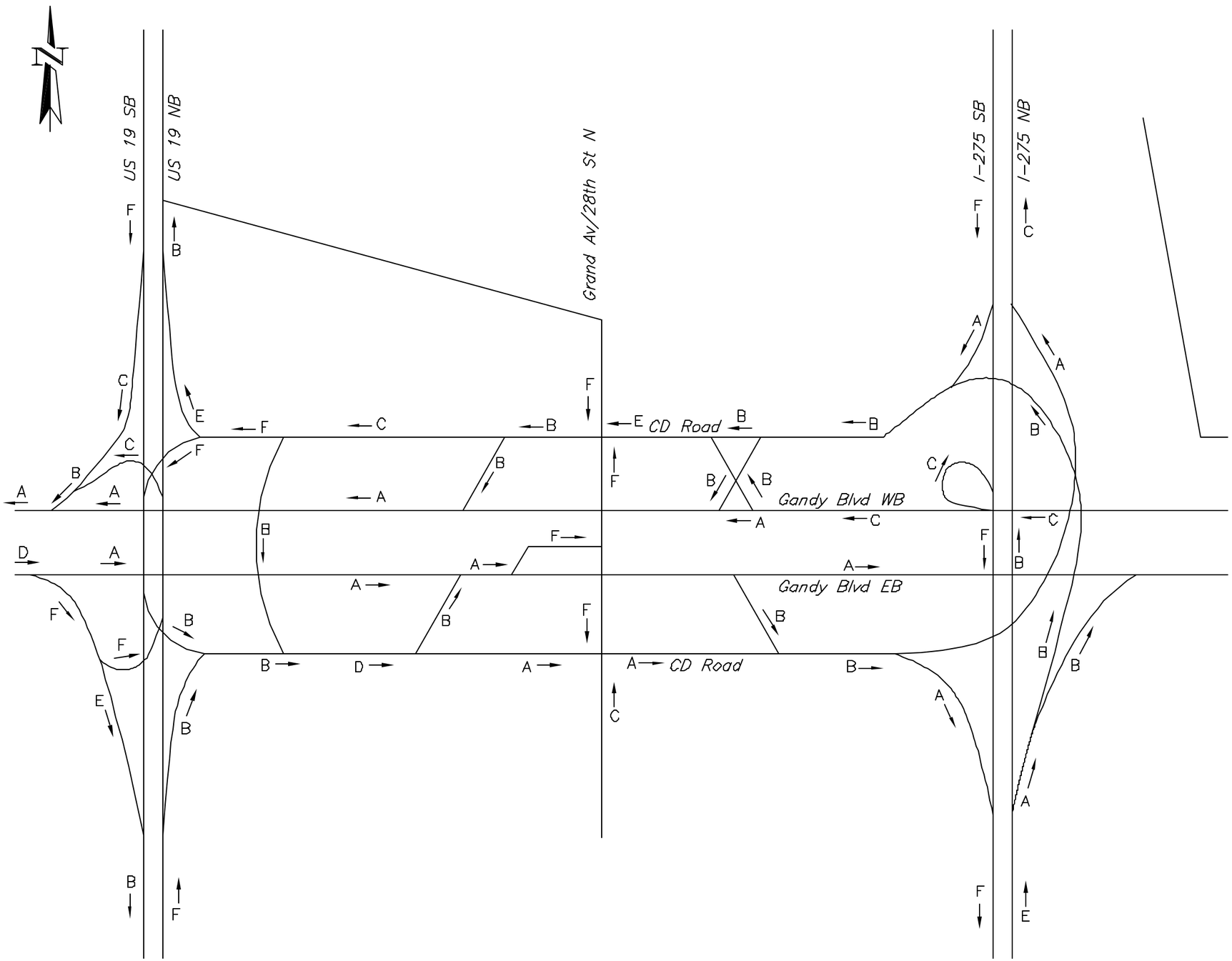

Florida Department of Transportation

SR 694 (Gandy Boulevard)

From US 19 to East of 4th Street
Pinellas County, Florida

Design Year (2025) Segment LOS-AM Peak (Preferred Alternative)

Plate A - Western Segment

Legend

F = Level of Service F

NOT TO SCALE

FPN#: 256931-1-32-01
DWG Date: January 12, 2001
REV Date: May 8, 2002

Figure 6.3a

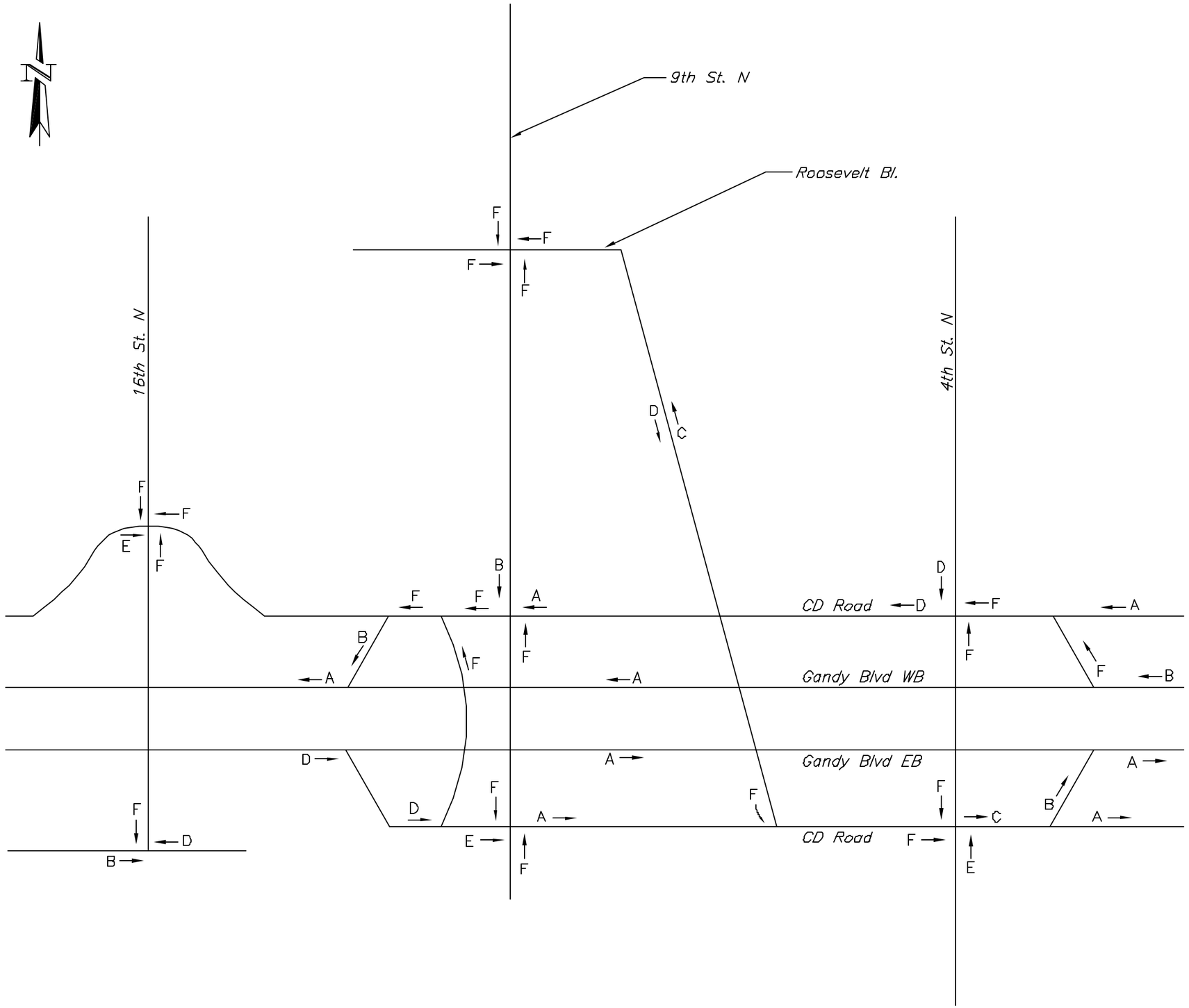

Florida Department of Transportation

SR 694 (Gandy Boulevard)

From US 19 to East of 4th Street
Pinellas County, Florida

Design Year (2025) Segment LOS-AM Peak (Preferred Alternative)

Plate B - Eastern Segment

Legend

F = Level of Service F

NOT TO SCALE

FPN#: 256931-1-32-01
DWG Date: January 12, 2001
REV Date: May 8, 2002

Figure 6.3b

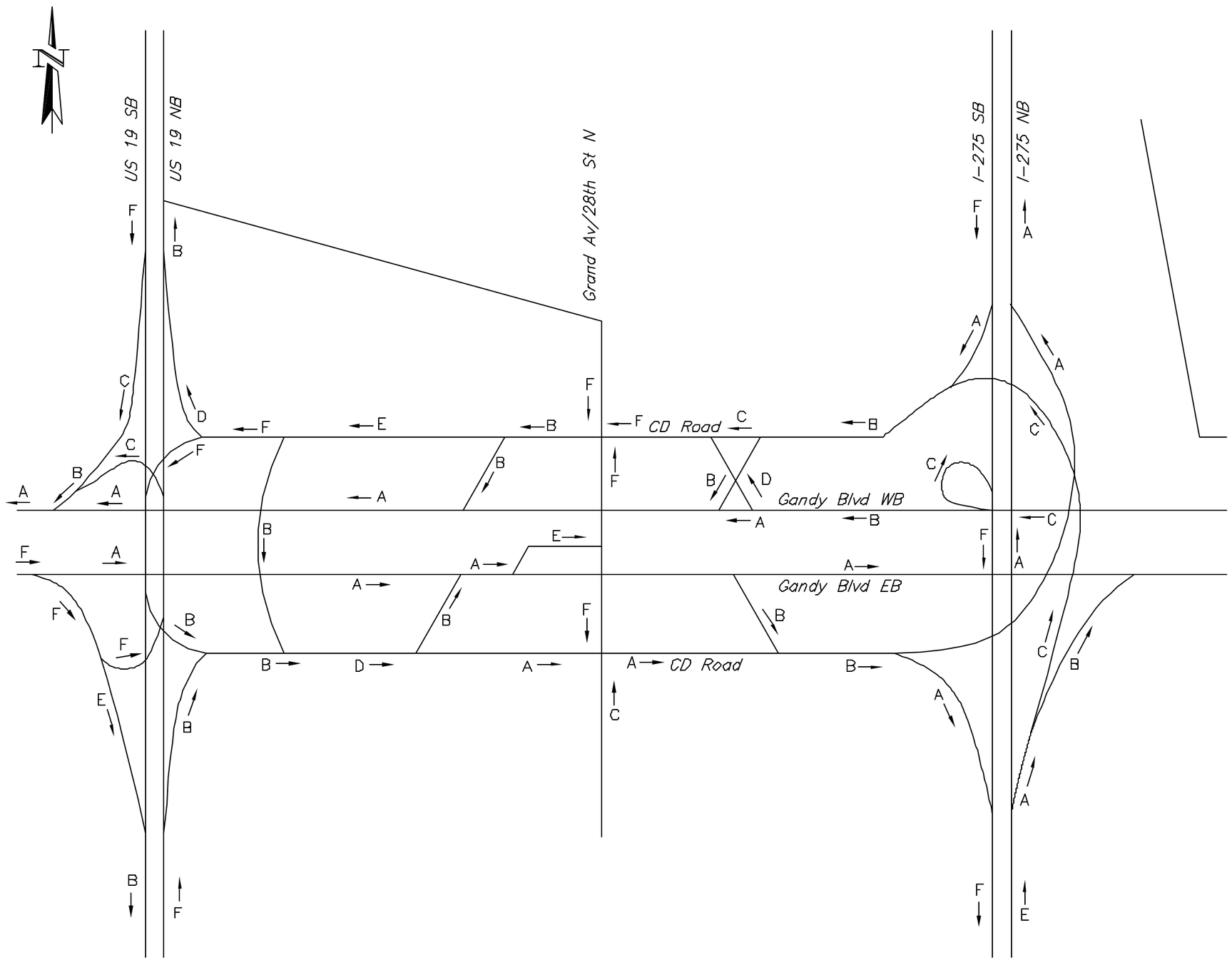

Florida Department of Transportation

SR 694 (Gandy Boulevard)

From US 19 to East of 4th Street
Pinellas County, Florida

Design Year (2025) Segment LOS-PM Peak (Preferred Alternative)

Plate A - Western Segment

Legend

F = Level of Service F

NOT TO SCALE

FPN#: 256931-1-32-01
DWG Date: January 12, 2001
REV Date: May 8, 2002

Figure 6.4a

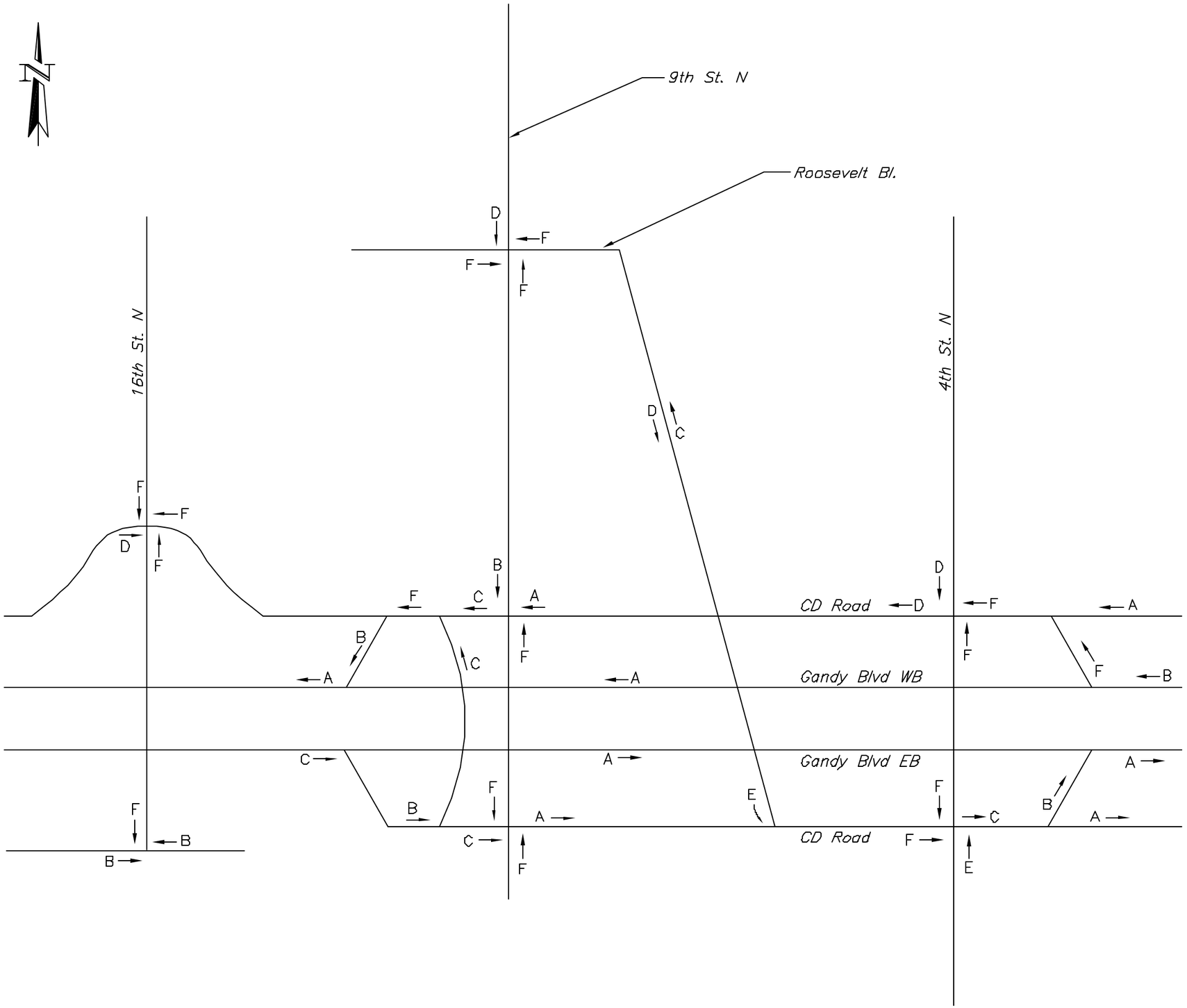

Florida Department of Transportation

SR 694 (Gandy Boulevard)

From US 19 to East of 4th Street
Pinellas County, Florida

Design Year (2025) Segment LOS-PM Peak (Preferred Alternative)

Plate B - Eastern Segment

Legend

F = Level of Service F

NOT TO SCALE

FPN#: 256931-1-32-01
DWG Date: January 12, 2001
REV Date: May 8, 2002

Figure 6.4b

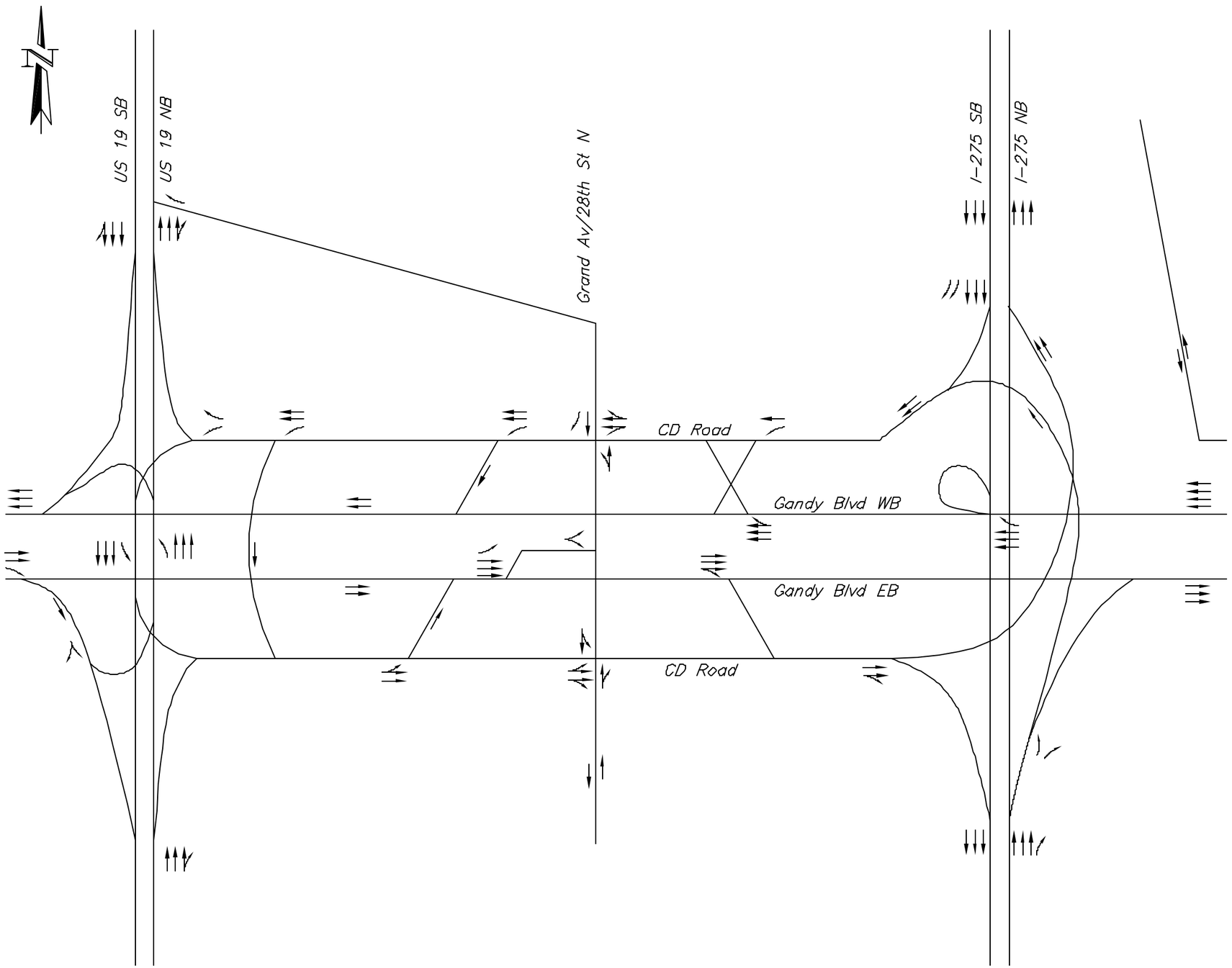

Florida Department of Transportation

SR 694 (Gandy Boulevard)

From US 19 to East of 4th Street
Pinellas County, Florida

Design Year (2025) Lane Configuration (Preferred Alternative)

Plate A - Western Segment

NOT TO SCALE

FPN#: 256931-1-32-01
DWG Date: January 12, 2001
REV Date: May 14, 2002

Figure 6.5a

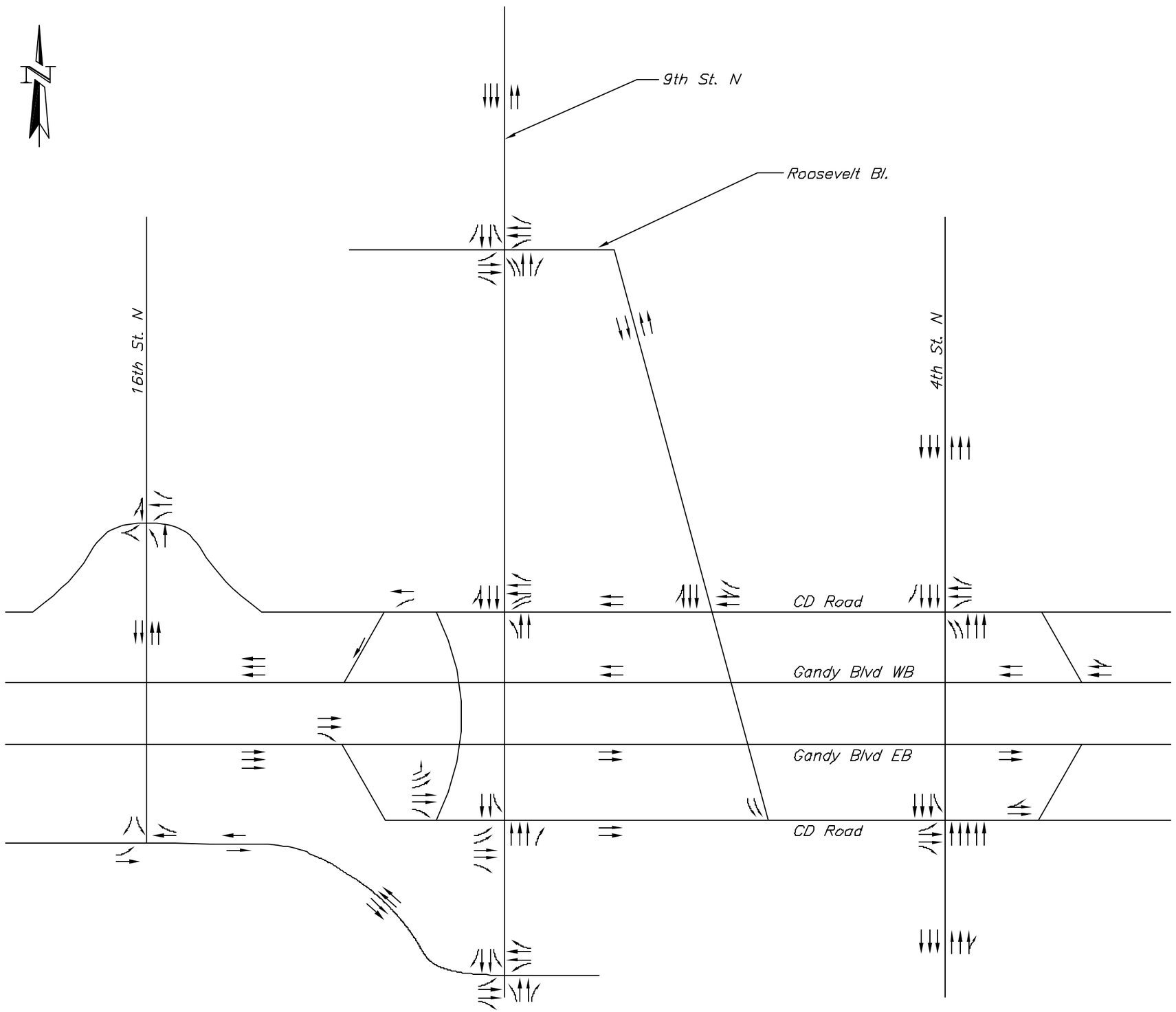

Florida Department of Transportation

SR 694 (Gandy Boulevard)

From US 19 to East of 4th Street
Pinellas County, Florida

Design Year (2025) Lane Configuration (Preferred Alternative)

Plate B - Eastern Segment

NOT TO SCALE

FPN#: 256931-1-32-01
DWG Date: January 12, 2001
REV Date: May 14, 2002

Figure 6.5b

This portion of Pinellas County remains at the core of the long-term economic development potential of the county. To support and enhance economic development in the area, the traffic bottlenecks at key intersections need attention. Analysis of three alternatives for the future of this corridor revealed that the Build - Structures Alternative would be most effective at addressing this issue.

SECTION 7
SUMMARY AND RECOMMENDATIONS OF REVISED PREFERRED ALTERNATIVE

A public hearing was held in March 2002 for the Gandy Boulevard PD&E. Based on the comments received from the hearing a design change was incorporated into the preferred Build alternative. The design change was the addition of a slip ramp from 16th Street to westbound Gandy Boulevard (SR 694). The slip ramp allows traffic from the 16th Street area to travel westbound on Gandy Boulevard (SR 694) without using the circuitous route via the south frontage road and 9th Street N. Since CORSIM was used to evaluate the future traffic operations for the preferred Build alternative. The following sections summarize the results of the operational analyses for the revised preferred Build alternative. Please note only the intersections and arterials impacted by the design change are summarized in the operational analyses presented in this section. For results on the remainder of the corridor, please refer to Section 2.

Shown in **Figure 7.1a&b** and **Figure 7.2a&b**, the revised preferred alternative includes structures throughout the corridor and also includes a frontage road system. A summary of the operational analyses for the signalized intersections effected by the design change is provided in **Table 7.1**. The slip ramp will allow traffic from the 16th Street area to travel westbound on Gandy Boulevard (SR 694) without using the circuitous route via the south frontage road and 9th Street N. As shown in **Table 7.1**, the intersections are expected to operate above the LOS D standard in 2025.

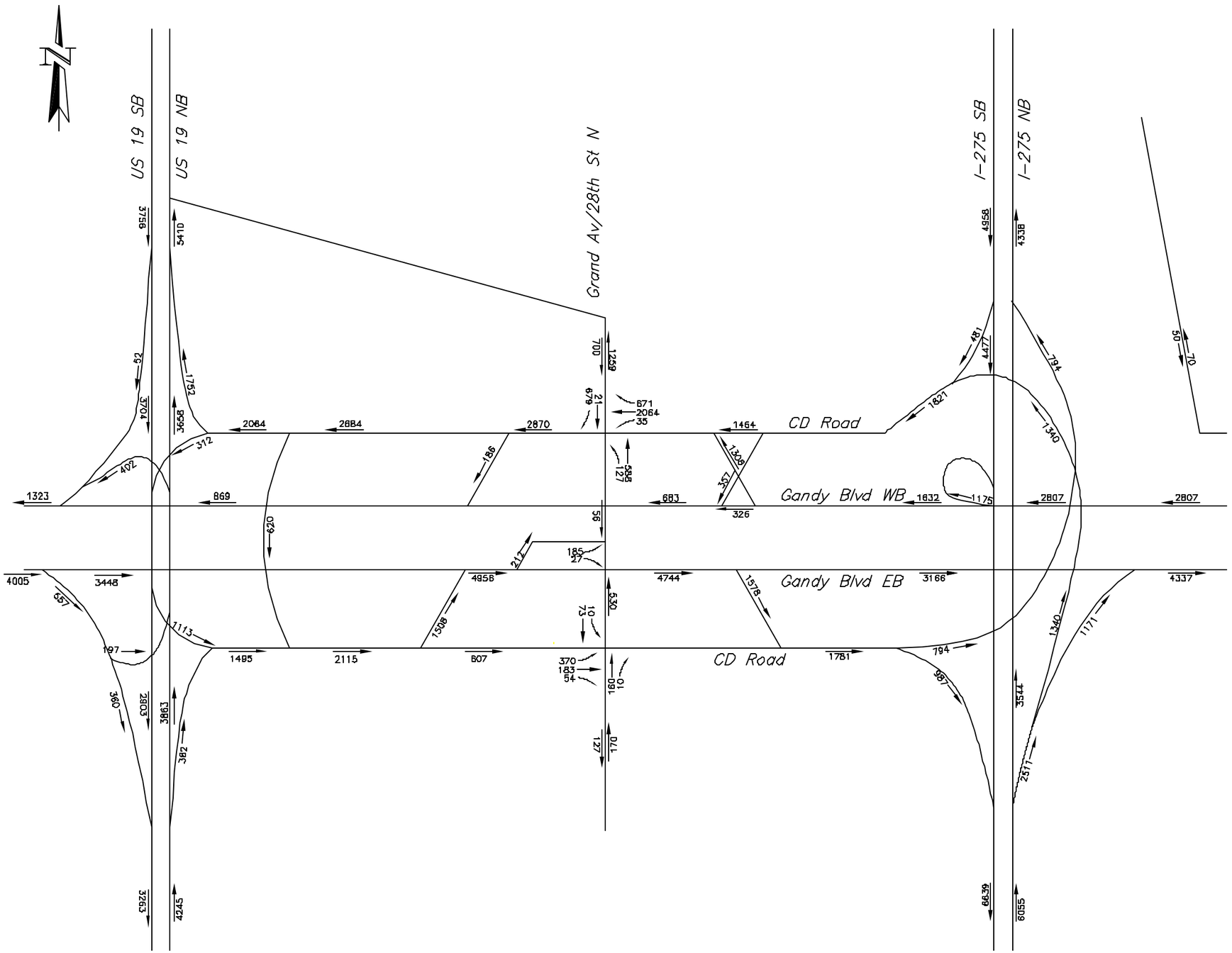

Florida Department of Transportation

SR 694 (Gandy Boulevard)

From US 19 to East of 4th Street
Pinellas County, Florida

Design Year (2025) AM Peak Hour Volumes (Revised Preferred Alternative)

Plate A - Western Segment

NOT TO SCALE

FPN#: 256931-1-32-01
DWG Date: January 12, 2001
REV Date: May 14, 2002

Figure 7.1a

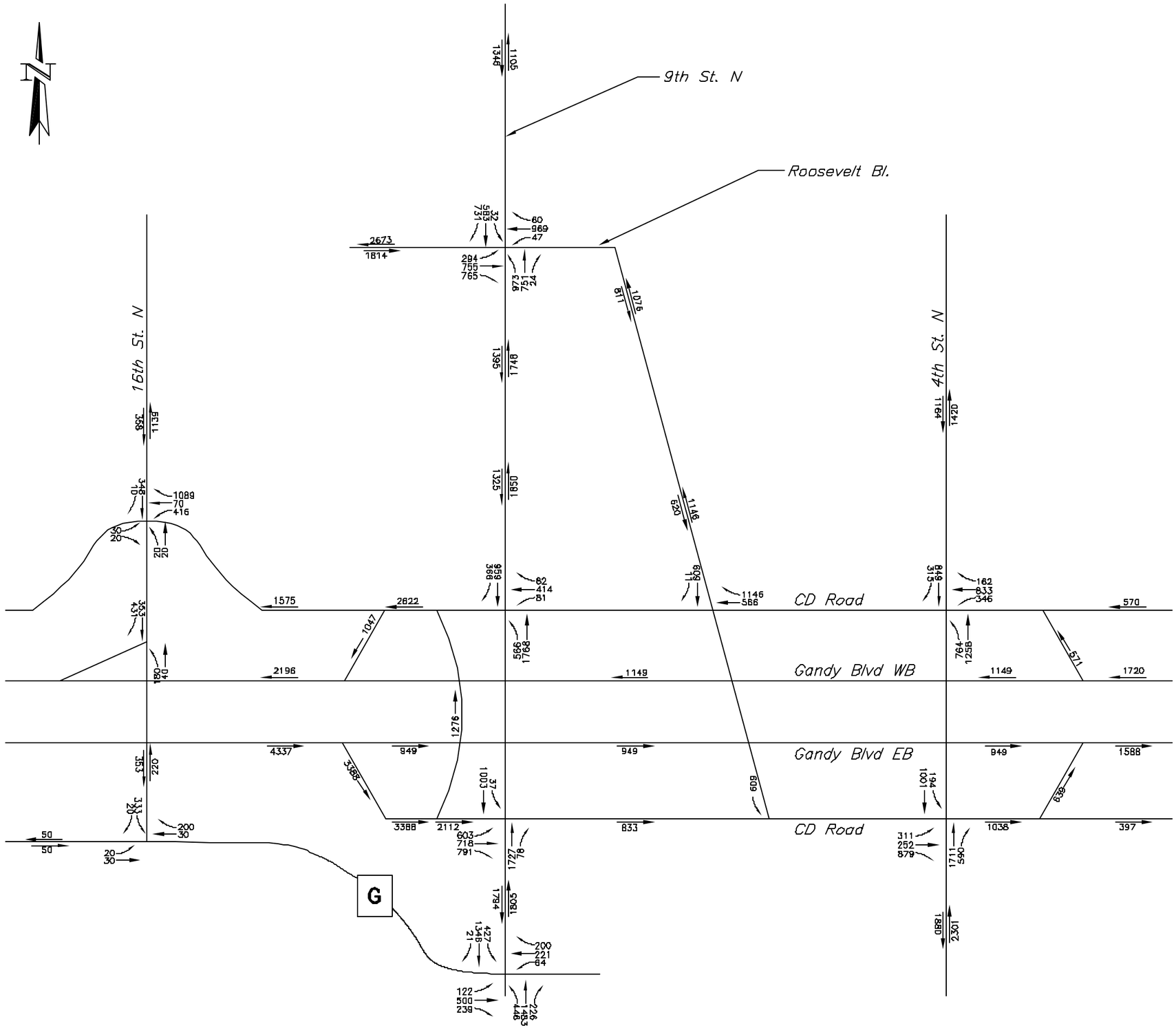

Florida Department of Transportation

SR 694 (Gandy Boulevard)

From US 19 to East of 4th Street
Pinellas County, Florida

Design Year (2025) AM Peak Hour Volumes (Revised Preferred Alternative)

Plate B - Eastern Segment

LEGEND

G - Trip Generator

NOT TO SCALE

FPN#: 256931-1-32-01
DWG Date: January 12, 2001
REV Date: May 14, 2002

Figure 7.1b

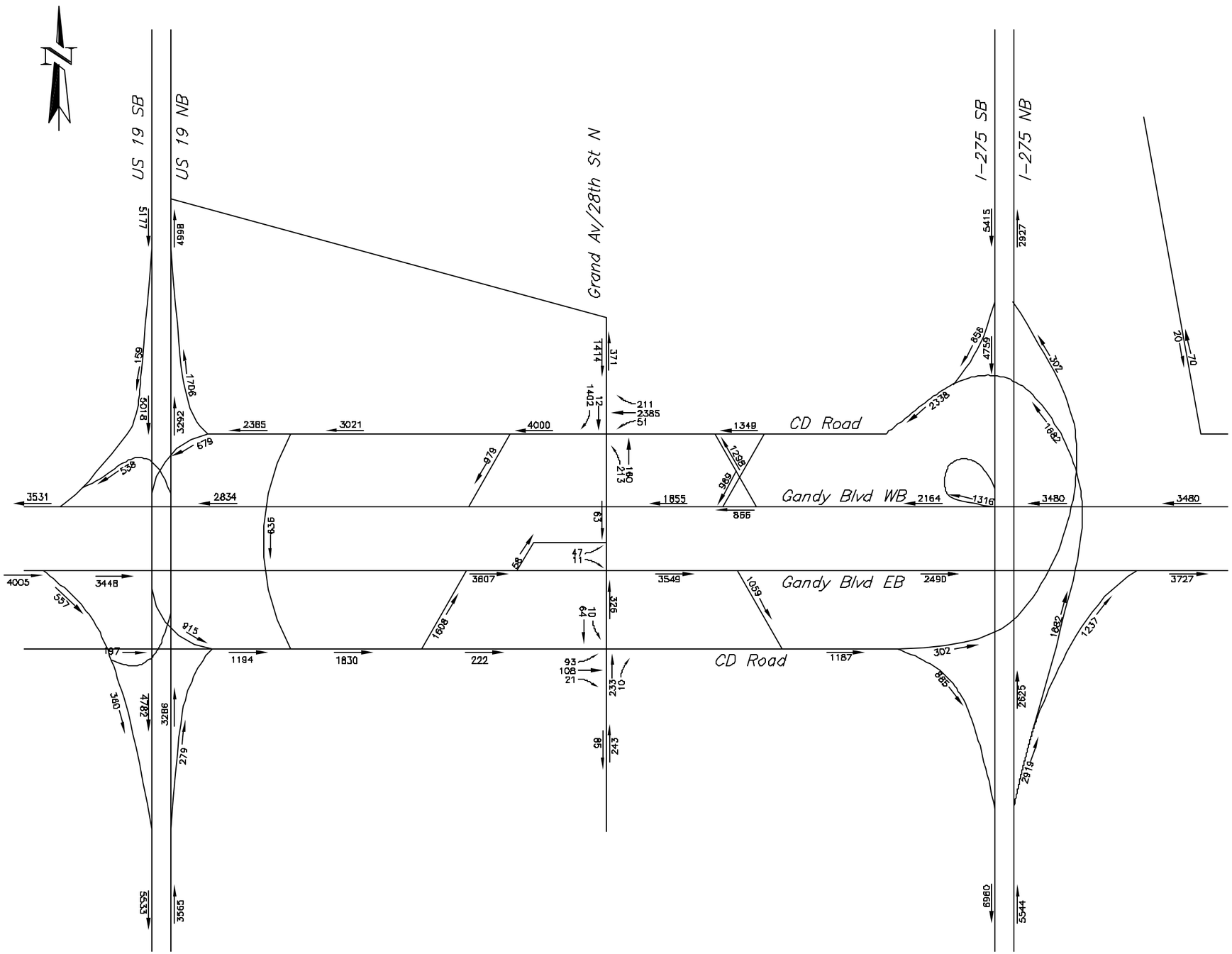

Florida Department of Transportation

SR 694 (Gandy Boulevard)

From US 19 to East of 4th Street
Pinellas County, Florida

Design Year (2025) PM Peak Hour Volumes (Revised Preferred Alternative)

Plate A - Western Segment

NOT TO SCALE

FPN#: 256931-1-32-01
DWG Date: January 12, 2001
REV Date: May 14, 2002

Figure 7.2a

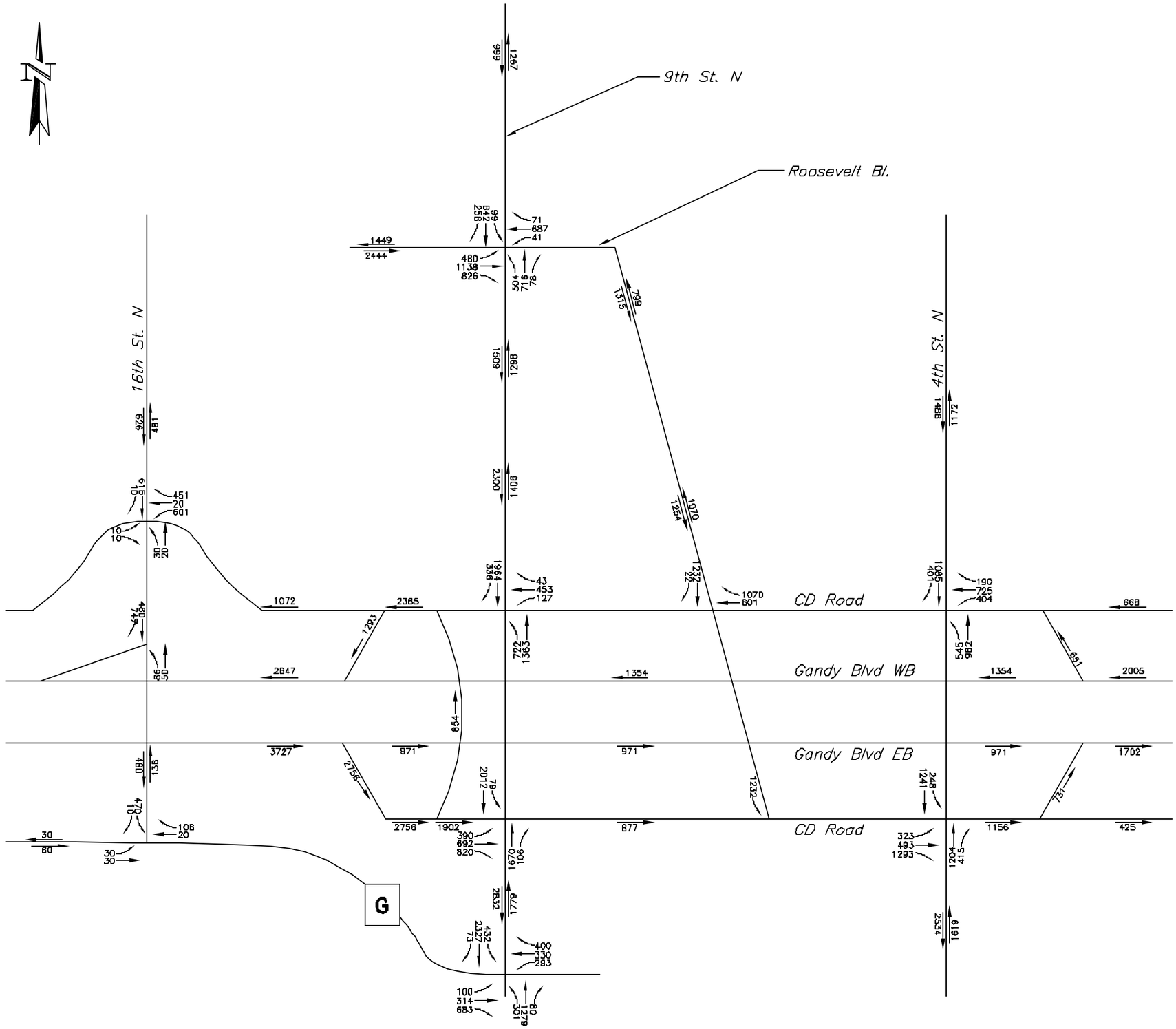

Florida Department of Transportation

SR 694 (Gandy Boulevard)

From US 19 to East of 4th Street
Pinellas County, Florida

Design Year (2025) PM Peak Hour Volumes (Revised Preferred Alternative)

Plate B - Eastern Segment

LEGEND

G - Trip Generator

NOT TO SCALE

FPN#: 256931-1-32-01
DWG Date: January 12, 2001
REV Date: May 14, 2002

Figure 7.2b

Table 7.1 Design Year (2025) Signalized Intersections LOS
Revised Preferred Build Alternative

Signalized Intersection	Revised Build (2025) Peak Hour	
	AM	PM
Westbound Frontage Road at 16th Street	B	B
Eastbound Frontage Road at 16th Street	B	B
Westbound Frontage Road at 9th Street N	C	B
Eastbound Frontage Road at 9th Street N	B	C

The LOS results of the operational analysis for the arterials effected by the revised preferred Build alternative are summarized in **Figure 7.3a&b and Figure 7.4a&b**. As shown in **Figure 7.3a&b and Figure 7.4a&b**, the arterial segments are expected to operate at LOS D or better during the year 2025.

As noted earlier CORSIM was used to reevaluate the operation analyses for the revised preferred Build alternative. The CORSIM output was compared for both Build alternatives. The comparison revealed that the queue lengths provided in the previous section were the same for the revised preferred Build alternative except for the intersection listed in the following tables. The maximum queue lengths for the signalized intersections during the 2025 AM peak hour are summarized in **Table 7.2**. The PM peak hour queue lengths are summarized in **Table 7.3**. These maximum queue lengths were incorporated into the conceptual design for the Gandy Boulevard (CR 694) revised preferred Build alternative.

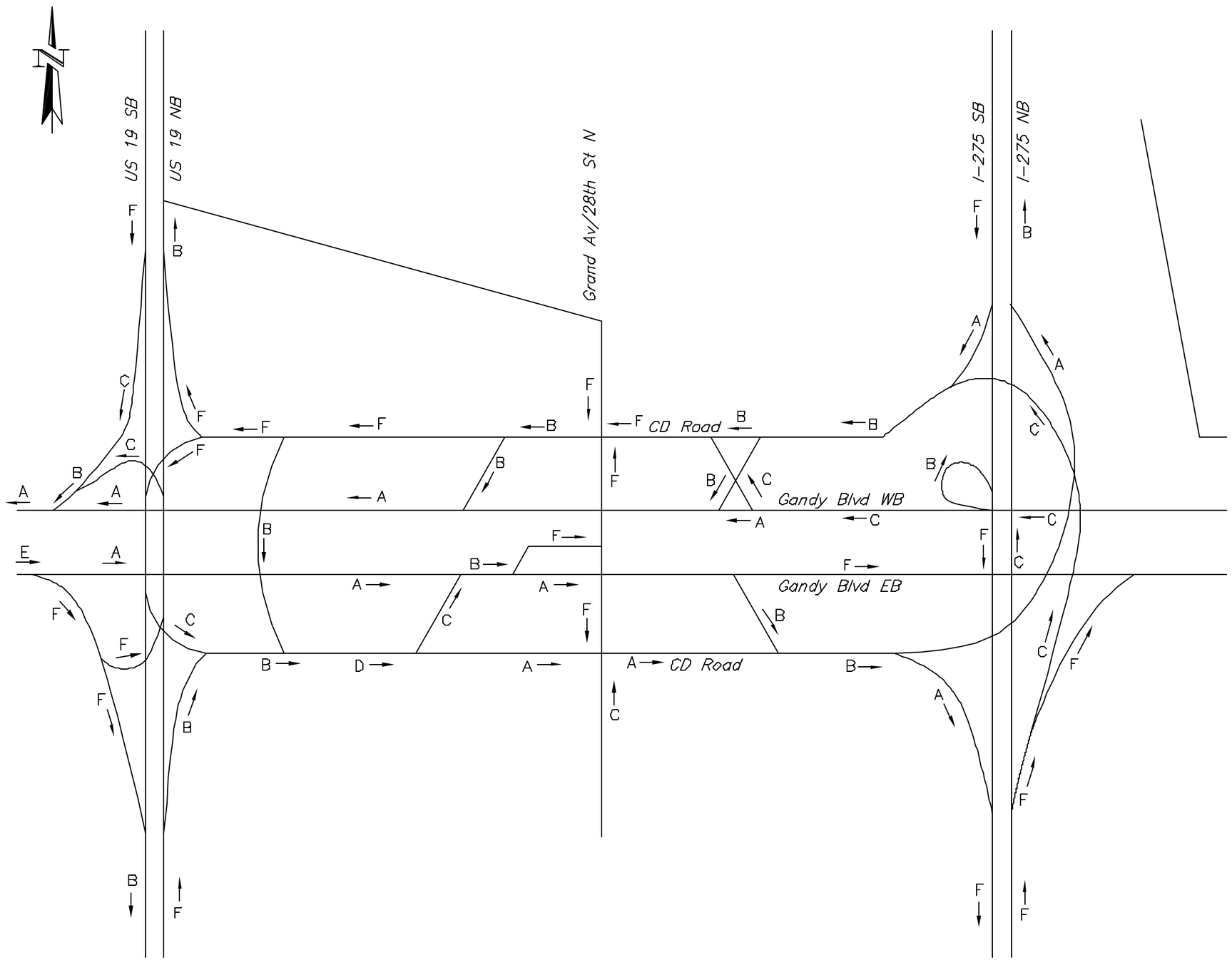

Florida Department of Transportation

SR 694 (Gandy Boulevard)

From US 19 to East of 4th Street
Pinellas County, Florida

Design Year (2025) Segment LOS-AM Peak (Revised Preferred Alternative)

Plate A - Western Segment

Legend

F = Level of Service F

NOT TO SCALE

FPN#: 256931-1-32-01
DWG Date: January 12, 2001
REV Date: May 10, 2002

Figure 7.3a

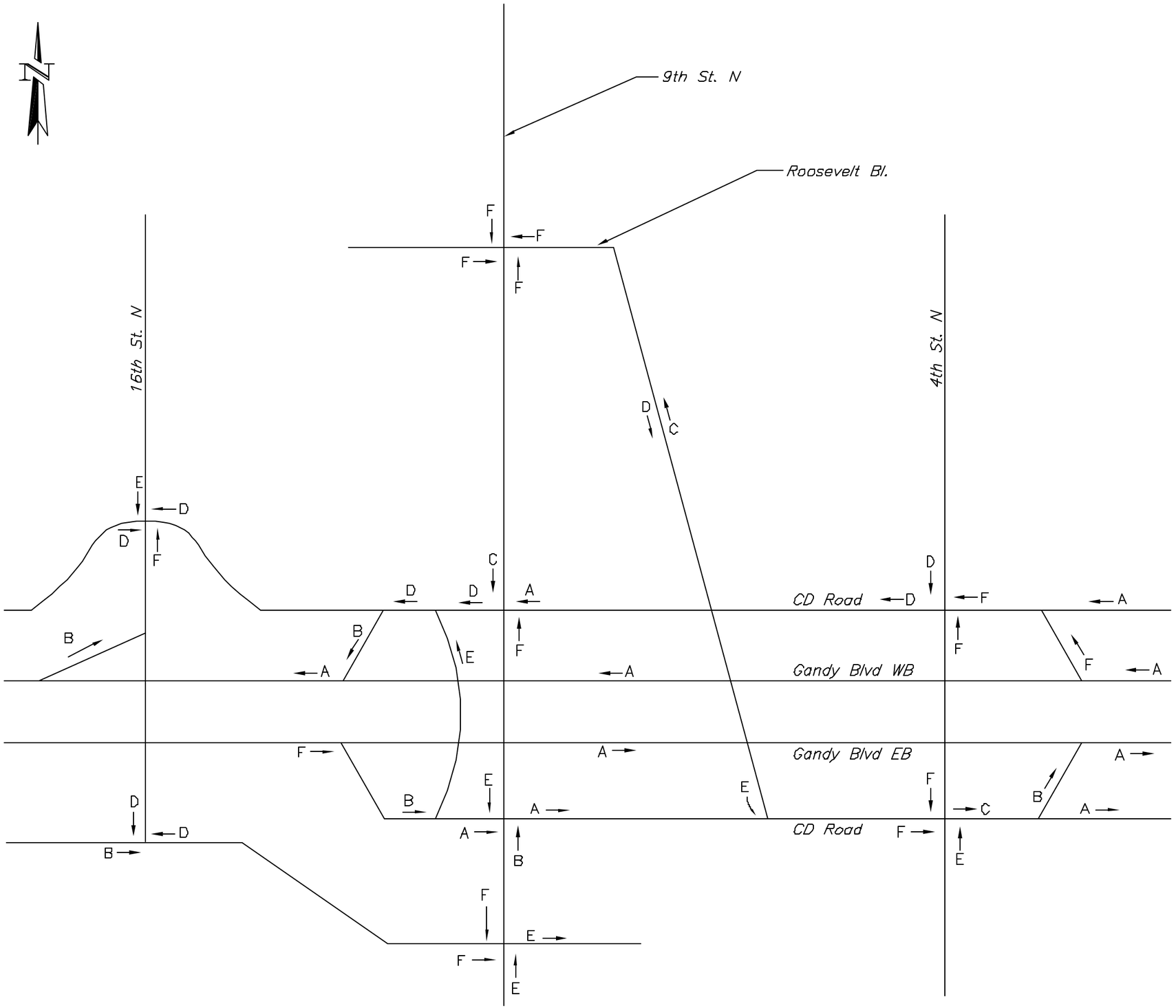

Florida Department of Transportation

SR 694 (Gandy Boulevard)

From US 19 to East of 4th Street
Pinellas County, Florida

Design Year (2025) Segment LOS-AM Peak (Revised Preferred Alternative)

Plate B - Eastern Segment

Legend

F = Level of Service F

NOT TO SCALE

FPN#: 256931-1-32-01
DWG Date: January 12, 2001
REV Date: May 14, 2002

Figure 7.3b

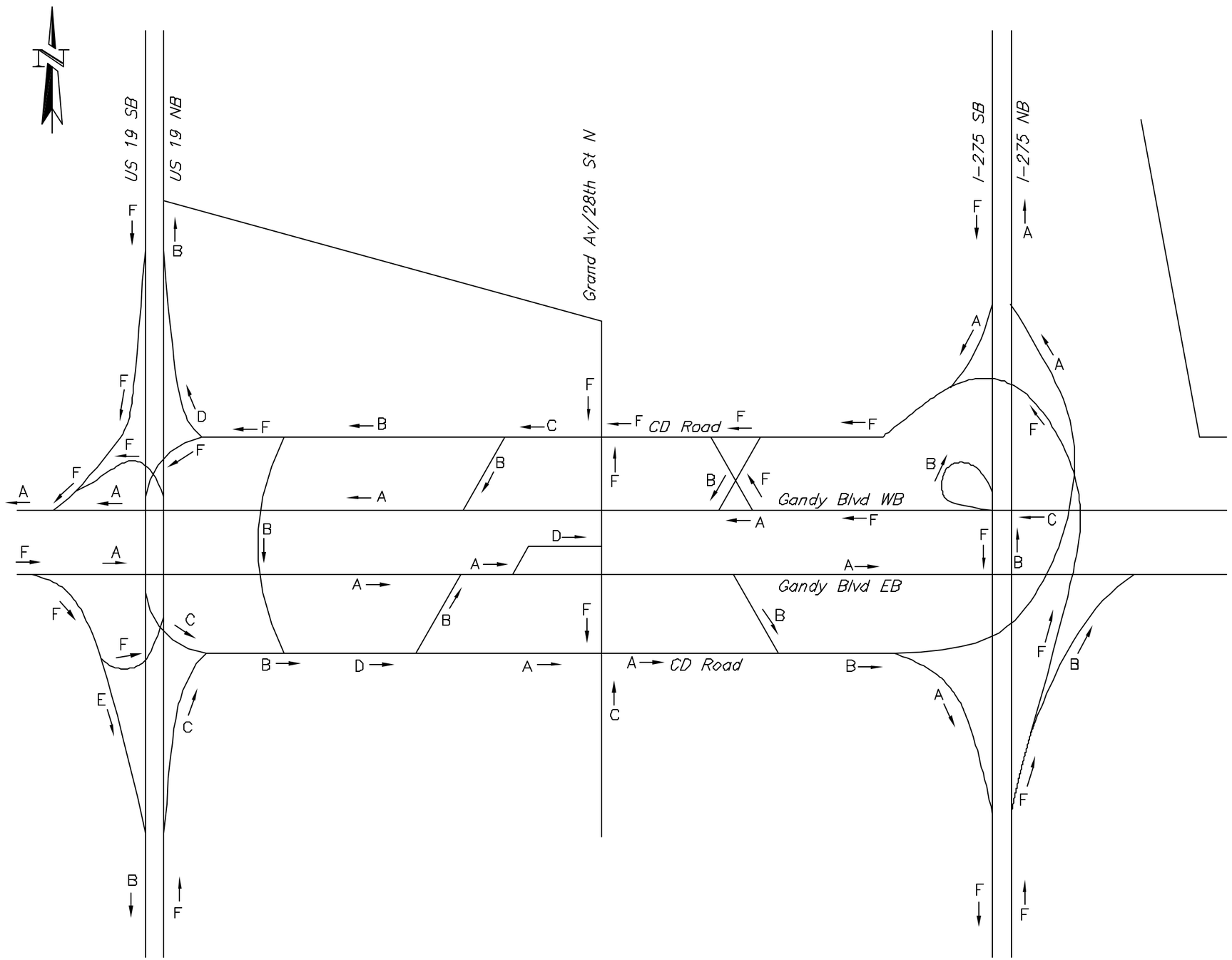

Florida Department of Transportation

SR 694 (Gandy Boulevard)

From US 19 to East of 4th Street
Pinellas County, Florida

Design Year (2025) Segment LOS-PM Peak (Revised Preferred Alternative)

Plate A - Western Segment

Legend

F = Level of Service F

NOT TO SCALE

FPN#: 256931-1-32-01
DWG Date: January 12, 2001
REV Date: May 14, 2002

Figure 7.4a

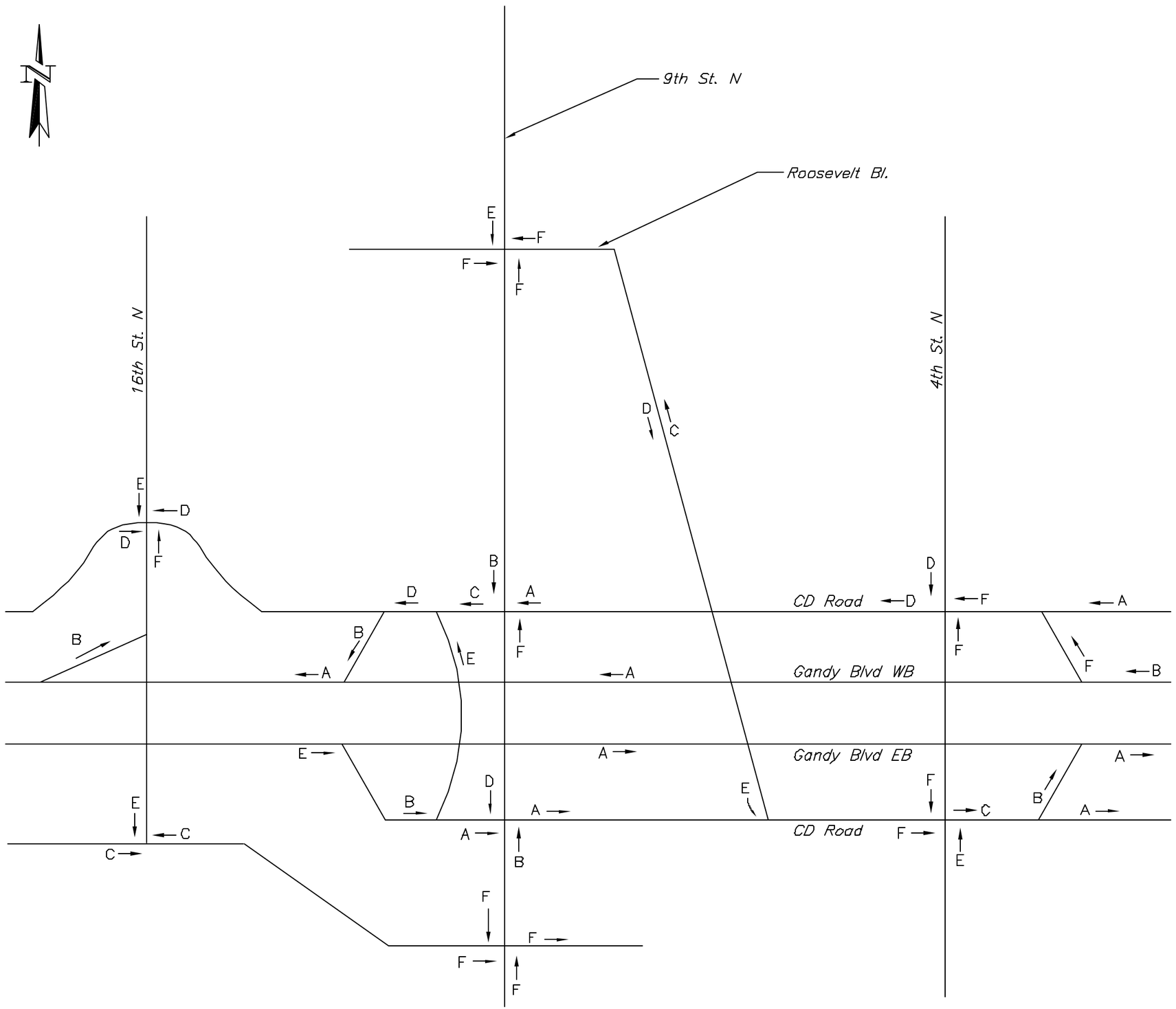

Florida Department of Transportation

SR 694 (Gandy Boulevard)

From US 19 to East of 4th Street
Pinellas County, Florida

Design Year (2025) Segment LOS-PM Peak (Revised Preferred Alternative)

Plate B - Eastern Segment

Legend

F = Level of Service F

NOT TO SCALE

FPN#: 256931-1-32-01
DWG Date: January 12, 2001
REV Date: May 14, 2002

Figure 7.4b

Table 7.2 Design Year (2025) Queue Lengths

Revised Preferred Build Alternative – AM Peak Hour

Intersection	2025 AM Peak Hour Maximum Queue Length (feet)											
	Southbound			Westbound			Northbound			Eastbound		
	L	T	R	L	T	R	L	T	R	L	T	R
Eastbound Gandy Boulevard (SR 694) off ramp at 16th Street N	154	N/A	22	N/A	264	0	N/A	N/A	N/A	22	22	N/A
Westbound Gandy Boulevard (SR 694) off ramp at 16th Street N	N/A	110	N/A	154	132	N/A	88	66	N/A	22	N/A	N/A
Eastbound Gandy Boulevard (SR 694) off ramp at 9th Street N	66	88	N/A	N/A	N/A	N/A	N/A	242	N/A	198	176	N/A
Westbound Gandy Boulevard (SR 694) off ramp at 9th Street N	N/A	176	N/A	44	132	N/A	308	264	N/A	N/A	N/A	N/A

Table 7.3 Design Year (2025) Queue Lengths

Preferred Build Alternative – PM Peak Hour

Intersection	2025 AM Peak Hour Maximum Queue Length (feet)											
	Southbound			Westbound			Northbound			Eastbound		
	L	T	R	L	T	R	L	T	R	L	T	R
Eastbound Gandy Boulevard (SR 694) off ramp at 16th Street N	198	N/A	22	N/A	220	0	N/A	N/A	N/A	22	22	N/A
Westbound Gandy Boulevard (SR 694) off ramp at 16th Street N	N/A	308	N/A	286	66	N/A	132	44	N/A	22	N/A	N/A
Eastbound Gandy Boulevard (SR 694) off ramp at 9th Street N	242	418	N/A	N/A	N/A	N/A	N/A	242	N/A	264	286	N/A
Westbound Gandy Boulevard (SR 694) off ramp at 9th Street N	N/A	198	N/A	88	198	N/A	352	198	N/A	N/A	N/A	N/A

The following recommended improvements are same as the preferred Build with one exception, the addition of a on-ramp ramp from 16th Street to westbound Gandy Boulevard (SR 694):

- Six-lane divided controlled access roadway
- Ramps (with additional ramp from 16th Street to Gandy Boulevard

The recommended lane geometry and interchanges for the Gandy Boulevard (SR 694) is reflected in **Figures 7.5a and 7.5b** and in the proposed plans shown in the Appendices.

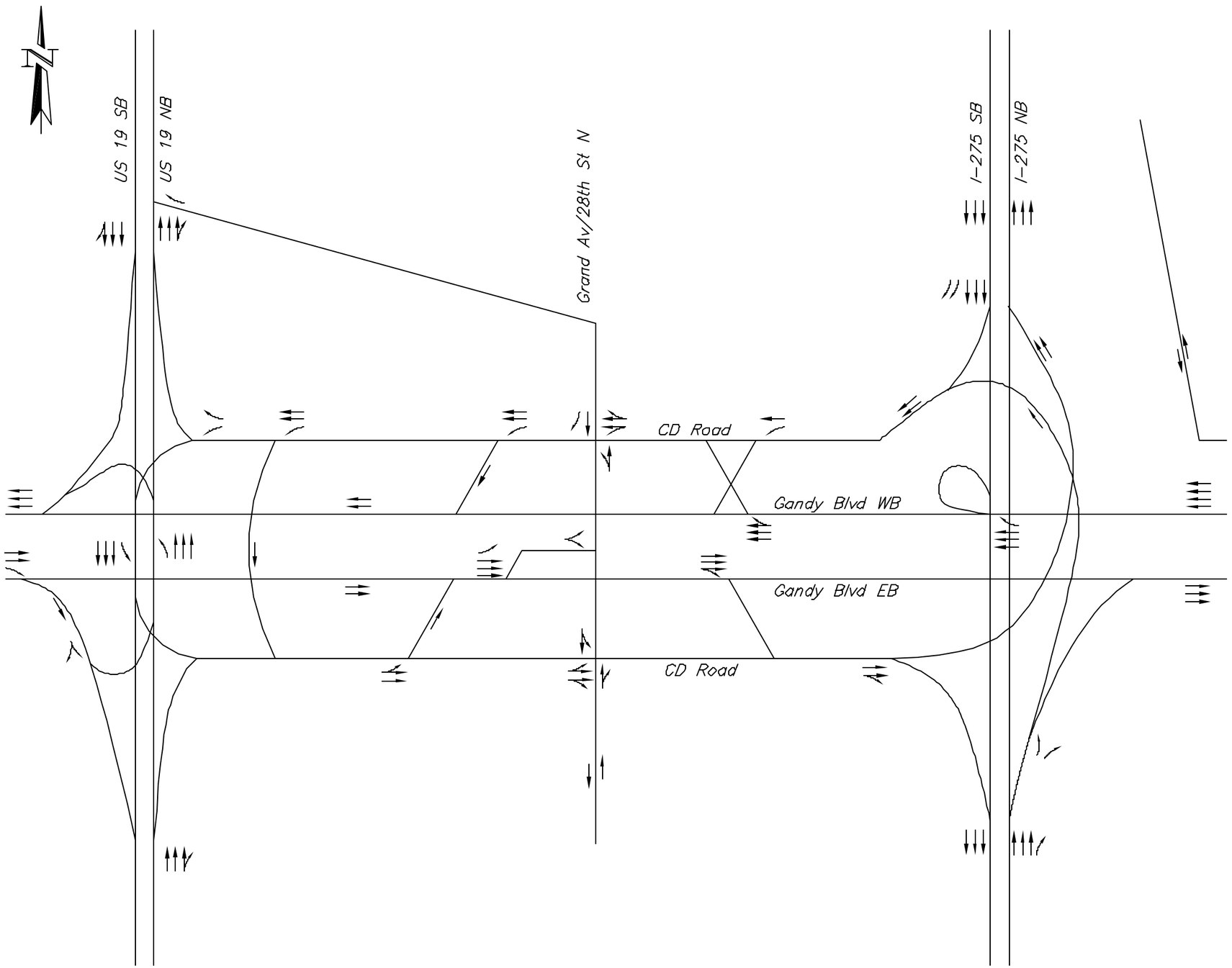

Florida Department of Transportation

SR 694 (Gandy Boulevard)

From US 19 to East of 4th Street
Pinellas County, Florida

Design Year (2025) Lane Configuration (Revised Preferred Alternative)

Plate A - Western Segment

NOT TO SCALE

FPN#: 256931-1-32-01
DWG Date: January 12, 2001
REV Date: May 14, 2002

Figure 7.5a

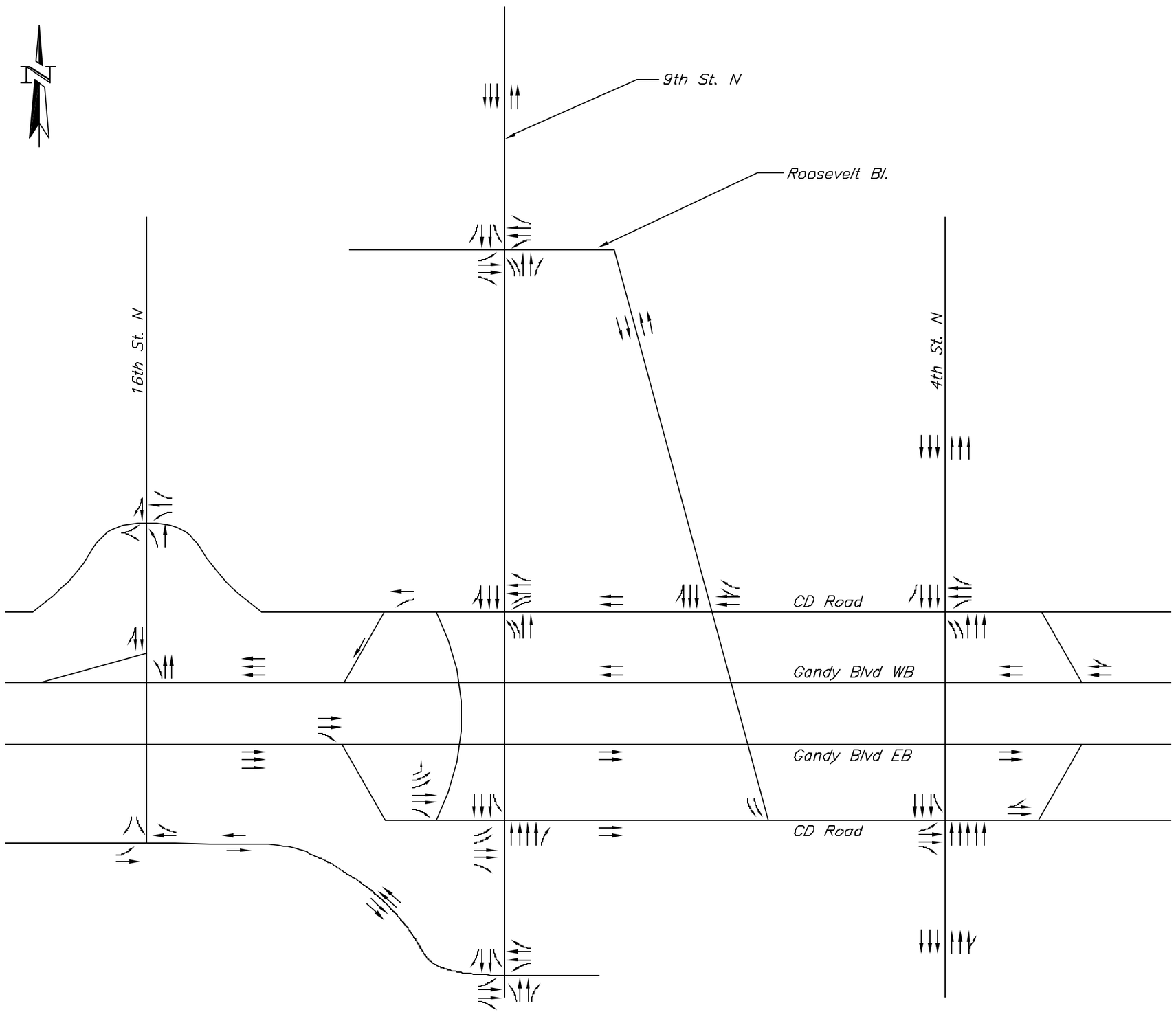

Florida Department of Transportation

SR 694 (Gandy Boulevard)

From US 19 to East of 4th Street
Pinellas County, Florida

Design Year (2025) Lane Configuration (Revised Preferred Alternative)

Plate B - Eastern Segment

NOT TO SCALE

FPN#: 256931-1-32-01
DWG Date: January 12, 2001
REV Date: May 14, 2002

Figure 7.5b

SECTION 8
REFERENCES

Florida Department of Transportation. Design Traffic Handbook. Florida, 1997.

Florida Department of Transportation. Interstate 275 at Ulmerton Road Interchange Modification Report 1999.

Florida Department of Transportation. 1998 Florida Traffic Information. 1998.

Florida Department of Transportation District 7. Gandy Boulevard Traffic Counts. 2000.

Florida Department of Transportation District 7, Traffic Operations Department. Crash Detail Reports. 2000.

Florida Department of Transportation District 7, Traffic Operations Department. Summary of Crashes Reports- Economic Costs. 2000.

MSI Engineering Corporation. Gandy Boulevard Traffic Counts. 2000.

Pinellas County Metropolitan Planning Organization. 1998 Transportation Level of Service Report. 1998.

Pinellas County Metropolitan Planning Organization. 2020 Long Range Transportation Plan. 1998.

Pinellas County Metropolitan Planning Organization . 1998 Annual Count Report. 1999.

Pinellas County Planning Department. Pinellas County Comprehensive Plan, Transportation Element as amended May 16, 2000.

Transportation Research Board. Highway Capacity Manual, Special Report 209, 3rd Edition. Washington, D.C.: Transportation Research Board, National Research Council, 1998.

University of Florida. Highway Capacity Software, Version 3.2. Gainesville, FL: McTrans Center, University of Florida, 1998.

White, Wade. Personal Interview with Ramon Solis, Principle Planner, Pinellas County Metropolitan Planning Organization. June 2000.